LESSMANN®

THE GERMAN BRUSH COMPANY

# Catalogue Edition 17

QUALITY MADE IN GERMANY

4 - 7 **Marketing Information**

8 - 13 **Technology, Material and Safety**

14 - 37 **Wheel Brushes**

Knot Wheel Brushes, Joint Cleaning Brushes, Pipeline Brushes, Single Segment Brushes, Wheel Brushes, Special Wheel brushes, Accessories

38 - 47 **Deburring Brushes**

Deburring Brushes, Roller Brushes, Deburring End Brushes

48 - 59 **Cup and Bevel Brushes**

Cup Brushes, Bevel Brushes, Brushes for grass trimmers

60 - 75 **Shank Brushes**

Shank Wheel Brushes, Cup Brushes with Shank, End Brushes, Miniature Brushes

76 - 93 **Hand Brushes and Brooms**

Standard Hand Brushes, Spark Plug Brushes, Fine Scratch Brushes, Special Models, Brooms and Scrubs, Dusters, Weed Brushes and Brooms

94 - 115 **Interior Brushes**

Mikro Interior Brushes, Cylinder Brushes, Sleeve Brushes, Stove Pipe Brushes, Boiler Brushes, Fitting Brushes, Brushes and Scratchers

116 - 125 **DIY Brushes and Sales Promotion**

Do It Yoursel Brushes, Packaging and Presentation, Sales Promotion

126 - 137 **Industrial Brushes**

Disc Brushes, Lath Brushes, Wheel and Roller Brushes, Strip Brushes

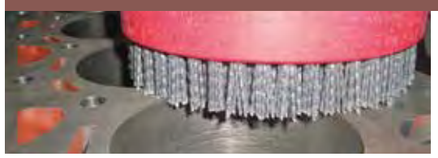

**Dear customers,**
**dear interested parties,**

As a medium-size family business LESSMANN stands for high-class surface finishing tools "Made in Germany". For us quality means to connect the experience of almost seven decades with today's technical expertise. The results are products that earn our customers' confidence in the high quality of German goods.

Retailers receive a wide assortment of standard goods for fair market value. Industrial customers may expect custom-made products which agree upon the special demands in their production processes. Permanent product improvements, working with innovative raw materials and being willed to break through technical limits, this again and again brings us new possibilities to create the ideal solutions for you.

In 2014 we finished the construction of our new 4.200 sqm production hall in Oettingen. This allows us to integrate new production areas as well as even more extensive quality and material tests. Due to the enlargement of our high rack storage area in 2016 we could optimize further production and logistic processes and also for the future we can assure an efficient throughput and delivery times.

Due to our recent building investment and permanent investments in modern production facilities we give a clear commitment to the production site in Germany from where our customers in Germany and abroad receive the LESSMANN brushes. Steady service, fast response times, selected suppliers and a constantly growing know-how of our qualified and committed employees – with these values we also would like to be in future as "THE GERMAN BRUSH COMPANY" your professional partner for technical brushes.

For the achievements and decisions we stand with our name.

Jürgen Lessmann

Dieter Lessmann

## Quality, Fairness, Reliability

LESSMANN®

To do the right things to the right time: the success of our company nowadays is based on contributions and entrepreneurial decisions in the past. This day, we, as a family enterprise in the third generation, are facing new customer demands and market statues, react flexible and work efficient, to gear our company up for the future!

Quality, Fairness and Reliability are the most important values in the relation to our customers and partners, since Johann Lessmann and its children Edgar and Traudel founded a small brush factory in Oettingen.

Strict quality management, uncompromising customer orientation and decades of experience make up the foundation of our success. One of the most important strengths are our 200 qualified and motivated employees, who are willing to get into new challenges, react flexible and to bring in their knowledge und competence. That's how we work together to have a mutual success.

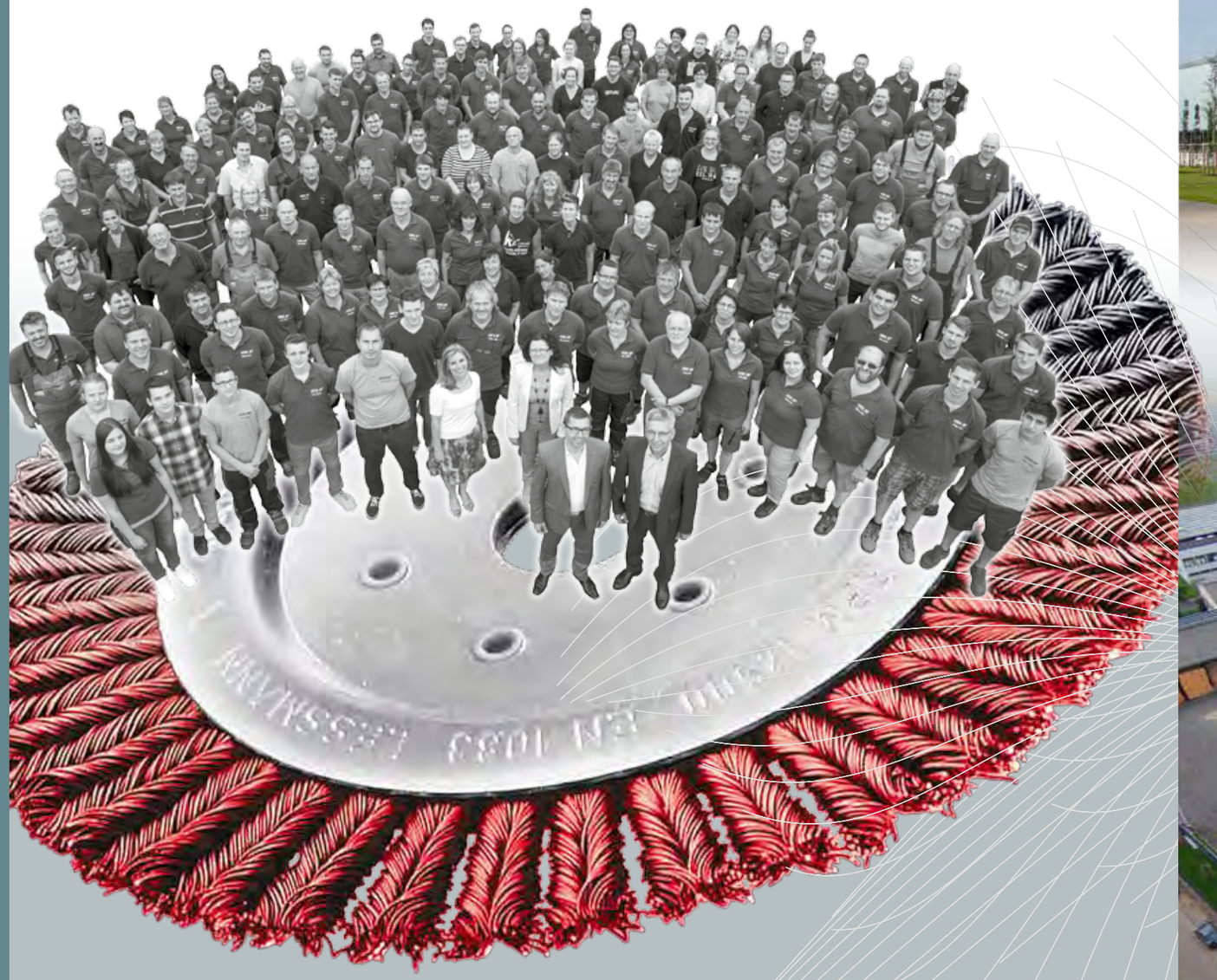

## Future-oriented investment

An important investment into the future is the construction of our new 4,200 sqm production hall in 2013: this step is a visible sign of our stable growth. We set another milestone in 2016 by the enlargement of our high rack storage area. These steps are a visible sign of our stable growth.

Besides the new building shows our intention to assure our position as leading technological and qualitative company and to strengthen it by opening new markets! Furthermore we have more space and capacities for producing more industrial special solutions – of course in our usual best quality and accuracy!

LESSMANN – THE GERMAN BRUSH COMPANY

# Made in Germany

Quality made in Germany. For Lessmann that does not only mean, that all our products are manufactured in Bavaria, but also the huge part of all raw materials as filament, wood, metal or plastics are purchased from renowned suppliers in Germany.

We manufacture almost all products in a broad standard program on our own. That's why already the quality of the raw materials has a significant role. Intensive test of the materials and inspections during production, build up two important values of the reliable LESSMANN-quality.

The headquarters in Germany requesting us to be the pioneer when using modern technology and automation. Thus our customers can receive the best quality at competitive prices.

# Fit for the Globe

First-class quality products, expertise and a high flexibility – our innovative technical brushes are "Fit for the Globe".

Depending on the country we work with our own employees, regional importers or authorised retailers. Our export department has the accurate know-how, to consult and satisfy the demand of our customers globally.

In 2016 we launched a foreign branch in the USA located in Houston, Texas. The „LESSMANN Inc." guarantees optimal service and logistics and our approved first-class products on the American market.

# Perfect Service for Perfect Presentation

The brand LESSMANN signifies quality and gives clearly structured information.

Please have a look at our home page in the internet!
On www.lessmann.com you will find our latest catalogue as well as leaflets to download. Further technical advice as well as operating instructions are available.

**Self-service Tool Bar Displays**
Take advantage of our experience and use this idea that will lead to successful and increased sales.

# Individual Solutions for special applications

Often technical brushes for very special applications are requested. Devarnishing surfaces or rounding burrs. Each application is different and a standard tool could not be used in each case.

Every day we develop new brushes for industrial demands. In the majority of the cases, the aim of the operator is to increase productivity. Our experienced consultants will help you to make the right choice and to find the appropriate design of the brushes for your individual needs.

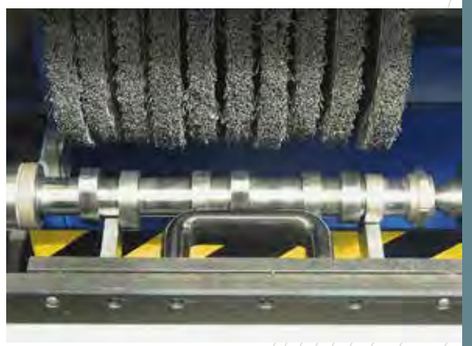

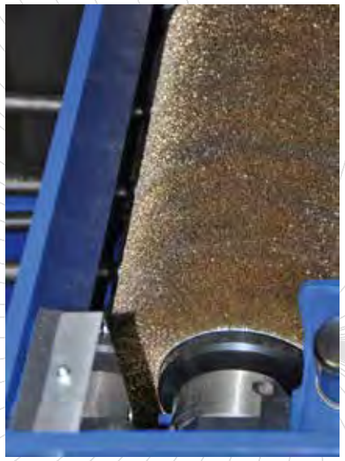

# "Simply the Best" by testing

Our own production of nearly all components of our standard programme and our own development of special articles enables us to have an excellent knowledge in both manufacturing quality and safety testing.

**Creating Innovation,**
**Exceeding Safety Standards,**
**Keeping Top Quality**

With this motivation we make complex development and product tests as an essential part of our work.

**Material Tests**
These are the first steps of our quality management: All deliveries of raw material are tested according to and above specification details. All wires are tested for their tensile strength and for their reverse bending strength by a fatigue measuring process.
Beside the quality of the material it is important that its attributes are as suitable as possible for their intended use.

**Imbalance Test**
An imbalance of machine driven brushes is not pleasant and is dangerous for the health of persons working at the machine.
Although it is not necessary under the DIN or the EN Norms, we produce our brushes according to our own standards for minimum imbalance. By doing so our customers take advantage of smooth running fatigue reducing brushes. Our employees in production ensure that these high quality aspects are maintained.

**Safety Tests**
According to European safety norms all brushes have to with-stand 1.5 times of the mentioned maximum RPM. Naturally when developing a brush, we test every brush type for this safety aspect. Only if all tests are satisfactory, can the article be produced. During production many samples are taken of the brushes in order to check the required safety speed. Should a model or a raw material be changed we begin the tests again. For this very reason every customer can rely on a high quality and safe tool.

**Lifetime and Power**
For the measurement of the lifetime and power of technical brushes there are neither norms nor standard procedures. After long developing processes and many tests we have found testing methods that simulate testing in real working conditions. On self built machines we are able to test the abrasion and thus the lifetime and power of machine driven brushes.
Beside the quality aspect these tests are helpful in optimising materials used, as well as component parts and the construction of brushes. Even if in comparison tests with competitor brushes such testing has shown and proved the high quality of our products:

**We keep on testing to guarantee customer satisfaction.**

## Quality is our feature!

**Accredited with DIN EN ISO 9001**



# Recommendations for Safe Brush Use

**LESSMANN Quality is Safe**
We guarantee the best quality and long lifetime for our products.
Our brushes are manufactured according to the existing standard DIN 68 347 part 1 and 2 and EN 1083. All the relevant machine driven brushes are checked for occupational safety using a centrifugal force test.

**Safety Information**
All machine driven brushes require as with other rotary tools, that the required safety precautions are kept:

**Safety for Your Body**
All operators and other personnel in areas where rotary brushes are being used must wear safety goggles or face shields and protective clothing.

**For your own safety:**
**Wear personal protective equipment**

**Brush Check**
The brushes should be checked for damage before using.

**A correct mounting is imperative.**

**Peripheral Speed**
**The max. RPM indicated in the catalogue are safety figures by which the brushes can be used without danger. Please do not exceed these figures under any circumstances! In most cases a lower RPM is sufficient to gain an optimal result.**

**Correct Pressure**
The schedule shows the necessary motor drive power for different brush diameters. The brushes need only a light pressure while brushing because only the wire points are effective (please look at the schedule). A higher pressure does not improve the brushing effect. In fact the brush lifetime is reduced and greater power is needed. The indicated curves inform you about the expected power. The power ratings refer to a brush with 30 mm width.

**Working with Shank Brushes**
When working with shank brushes please note that the shank has to be inserted fully into the tool.
This is especially necessary when working with high RPM, for example on straight grinders and pneumatic tools.

**Mechanical use of interior brushes**
The max. RPM only is allowed when the brush is clamped min. for 10 mm into the tool. When the brush is inserted into the suitable work piece, higher RPMs are possible. Only use the brush right rotating.

**Correct**

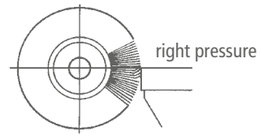


**Incorrect**

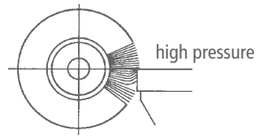


**Machine usage:**
These symbols in the chapters show on which machines the brushes usually are used.

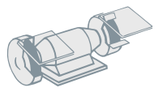

**Stationary equipment**

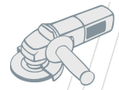

**Angle grinder**

**Straight grinder**

**Drilling machine**

**Grass trimmer**

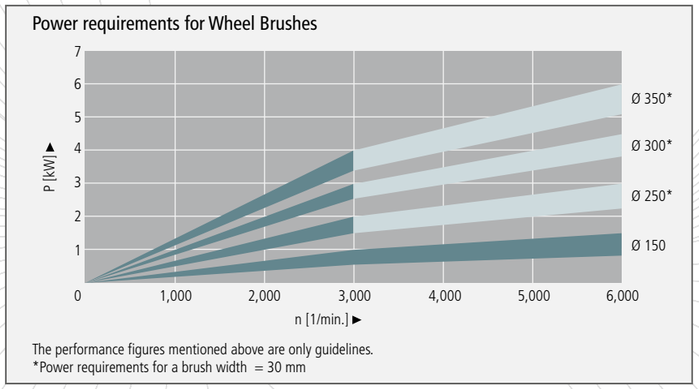


The performance figures mentioned above are only guidelines.
*Power requirements for a brush width = 30 mm

**minimum bore size for wheel brushes according to DIN EN 1083**

| Diameter of the brush in mm | Minimum diameter of bore in mm |
|---|---|
| 50 | 4.6 |
| 75 | 6.5 |
| 100 | 10 |
| 150 | 13 |
| 200 | 16 |
| 250 | 20 |
| 300 | 20 |
| 350 | 32 |

**Recommended use of brushes on angle grinders – the right combination**

| Common idle speed of angle grinders (WS) | Brush diameter | 60 | 65 | 75 | 80 | 90 | 100 | 115 | 125 | 150 | 178 | 200 |
|---|---|---|---|---|---|---|---|---|---|---|---|---|
| | Knot Wheel Brush | | | | | | WS 1 | WS 1 | WS 2 | WS 3 | WS 4 | WS 5 |
| Ø 115 11,000 RPM = WS 1 | Cup Brush, Crimped Wire | WS 2 | | WS 2 | WS 3 | | WS 3 | | WS 5 | WS 5 | | |
| Ø 125 11,000 RPM = WS 2 | Knot Cup Brush without Bridle | | WS 1 | WS 2 | WS 2 | WS 2 | WS 3/4 | | WS 5 | | | |
| Ø 150 9,000 RPM = WS 3 | Knot Cup Brush with Bridle | | | | WS 3/4 | | WS 3/4 | | WS 5 | | | |
| Ø 180 8,500 RPM = WS 4 | Knot Bevel Brush | | | | | | WS 1 | | | | | |
| Ø 230 6,500 RPM = WS 5 | Knot Bevel Brush | | | | | | WS 1 | WS 1 | | | | |

**Warning:** Before each operation please compare the idle speed of the angle grinder with the max. peripheral speed of the brush!

# Producing Quality – brushing the correct way

**Optimise Brush Results**
The brush diameter and filling length are most important for the perfect brushing result. It is therefore very easy to eliminate almost all bad brushing results:

**Brushing effect too weak:**
- Increase the peripheral speed by increasing the brush diameter or the operating speed, but never exceed the maximum RPM rating.
- Use a brush with shorter trim length.
- Use a brush with larger wire diameter.

**Brushing effect too powerful:**
- Reduce the peripheral speed by reducing the brush diameter or the operating speed.
- Use a brush with longer trim length.
- Use a brush with smaller wire diameter.

**Brush transfers burr:**
- Use a brush with shorter trim length.
- Examine brush and work piece position.
- Use a brush with wider face.
- Use a brush with thicker wire diameter.

Information for brushing on stainless steel materials you find at **www.lessmann.com**

**Peripheral Speed v in m/sec. (please follow the max. rotary speed of the brush!)**

| n [1/min.] | Brush diameter d in mm/inches | | | | | | | |
|---|---|---|---|---|---|---|---|---|
| (RPM) | 50 | 80 | 100 | 125 | 150 | 200 | 250 | 300 |
| | 2" | 3" | 4" | 5" | 6" | 8" | 10" | 12" |
| 1,000 | | 4.2 | 5.2 | 6.5 | 7.9 | 10.5 | 13.1 | 15.7 |
| 1,500 | 3.9 | 6.3 | 7.9 | 9.8 | 11.8 | 15.7 | 19.6 | 23.6 |
| 2,000 | 5.2 | 8.4 | 10.5 | 13.1 | 15.7 | 20.9 | 26.2 | 31.4 |
| 2,500 | 6.5 | 10.5 | 13.1 | 16.4 | 19.6 | 26.2 | 32.7 | 39.3 |
| 3,000 | 7.9 | 12.6 | 15.7 | 19.6 | 23.6 | 31.4 | 39.3 | 47.1 |
| 3,500 | 9.2 | 14.7 | 18.3 | 22.9 | 27.5 | 36.7 | 45.8 | 55.0 |
| 4,000 | 10.5 | 16.8 | 20.9 | 26.2 | 31.4 | 41.9 | 52.4 | 62.8 |
| 5,000 | 13.1 | 20.9 | 26.2 | 32.7 | 39.3 | 52.4 | 65.4 | 78.5 |
| 6,000 | 15.7 | 25.1 | 31.4 | 39.3 | 47.1 | 62.8 | 78.5 | |
| 8,000 | 20.9 | 33.5 | 41.9 | 52.4 | 62.8 | 83.8 | | |
| 10,000 | 26.2 | 41.9 | 52.4 | 65.4 | 78.5 | | | |
| 12,500 | 32.7 | 52.4 | 65.4 | 81.8 | | | | |
| 15,000 | 39.3 | 62.8 | 78.5 | | | | | |
| 20,000 | 52.4 | 83.8 | | | | | | |
| 25,000 | 65.4 | | | | | | | |

$$v = \frac{\text{Brush diameter (d)} \times \pi \times \text{Peripheral Speed (n)}}{1{,}000 \times 60}$$

**Conversion mm in Inches and I.S.W.G.**

| Brush diameter | |
|---|---|
| Millimeter | Inches |
| 25 | 1" |
| 50 | 2" |
| 75 | 3" |
| 100 | 4" |
| 125 | 5" |
| 150 | 6" |
| 180 | 7" |
| 200 | 8" |
| 250 | 10" |
| 300 | 12" |
| 350 | 14" |

| Wire diameter | | |
|---|---|---|
| Millimeter | Inches | I.S.W.G |
| 0.08 | 0.0031 | 44 |
| 0.10 | 0.0039 | 42 |
| 0.12 | 0.0047 | 40 |
| 0.15 | 0.0059 | 38 |
| 0.20 | 0.0079 | 36 |
| 0.25 | 0.0098 | 33 |
| 0.30 | 0.0118 | 31 |
| 0.35 | 0.0138 | 29 |
| 0.40 | 0.0157 | 27 |
| 0.50 | 0.0197 | 25 |
| 0.80 | 0.0315 | 21 |

**Recommended Peripheral Speed for Brushing Application**

| Application | Peripheral Speed in m/s | | | | | | | |
|---|---|---|---|---|---|---|---|---|
| | 15 | 20 | 25 | 30 | 35 | 40 | 45 | 50 |
| Removing Burrs | | | | 25 - 35 | | | | |
| Cleaning Welds | | | | | | 35 - 45 | | |
| Removing Scale | | | | | | 35 - 45 | | |
| Polishing | | | | | 30 - 40 | | | |
| Working on Plastic | | 15 - 20 | | | | | | |

**Recommended Peripheral Speed for Brushing with Abrasive Filaments**
Dry conditions: 16 - 18 m/s
Wet conditions: 25 - 30 m/s

Since the upcoming heat on wet applications is conducted, the peripheral speed can be set much higher than on dry applications. For working in wet condition we recommend PA 6.12 as base. Please state on your order!



# Brush filling materials and the characteristics

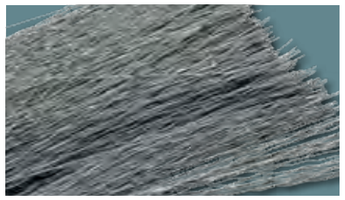

**STA Steel Wire straight / crimped**
is developed in co-operation with wire producers, so that it meets our special requirements. This wire is alloyed with manganese in order to increase its toughness. Result is higher tensile strength and longer lifetime of LESSMANN-Brushes.

**STH Steel Wire High Tensile straight / crimped**
is most often used in Knotted Brushes, Deburring Brushes and Pipeline Brushes. Furthermore we offer this high tensile wire in our complete assortment. Above all it features through its tensile strength and high fatigue rates, what results in lifetime even for extreme brushing applications.

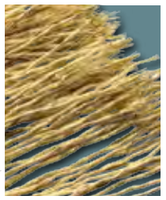

**STM Brass Coated Steel Wire**
For long lifetime plus high tensile strength and cutting performance. Best results in brushing and deburring applications.

**STL Cord Wire**
Brass coated steel wire corded. Longest lifetime for heavy duty brush applications e. g. deburring.

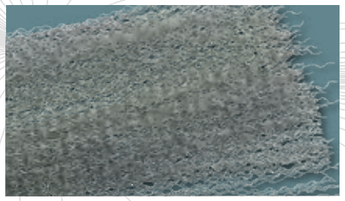

**ROF / RO4 / ROL / RO8 Stainless Steel Wire**
**ROF** must be used when working on stainless steel. Material number (WNr.) **1.4301 (AISI 304)**. This wire is resistant against corrosion and certain acids and bleaches.
**RO4** Premium-quality stainless steel wire. WNr. **1.4401 (AISI 316)**
**RO8** High heat resistant stainless steel wire. WNr. **1.4860**.
**ROL** Stainless Steel Wire with cord construction WNr. **1.4310**

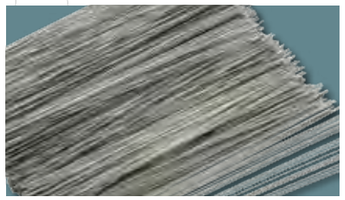

**ROH Stainless Steel Wire High Tensile**
This wire is characterized by a high tensile strength and a long lifetime even in extreme applications. WNr. **1.4310 (AISI 301)**.

Further information on brushing on stainless steel materials you find at **www.lessmann.com**

**MES Brass Wire (CuZn)**
is softer than steel wire. Among other applications brass wire is suitable for working with mild bleaches. It's mainly used for processing of nonferrous metals.

straight / crimped / knotted: Metal wires for brushes can be processed in brushes straight, crimped or knotted. Wire knots are always made with straight wires. Compared to a straight wire with the same diameter the wire knots are much stronger than the single wire. Crimped wires brace each other and therefore achieve a better stability in the brushes.

# Brush filling materials and the characteristics

**BRO Bronze Wire (CuSn)**
is used for surface processing of wood and metal. It's also used when non sparkling brushes are needed.

**NSI Nickel Silver (CuNi)**
is used for polishing work pieces e. g. parts of nickel silver or brass, as it is softer than steel wire.

**PP, PA, PE Synthetic Filaments**
are resistant to abrasion and flexible. Despite minor resistance against heat these filaments are perfect for cleaning, grinding or surface pro-
cessing of metal, plastic or wood.
Available are:
- Polypropylen (PP)
- Polyamid (PA) - PA 6, PA 6.6, PA 6.12
- Polyethylen (PE)

**FIB Fibre**
consists of heat resistant plant fibre, is slightly abrasive and therefore can be used for smooth grinding, above all for working on wooden surfaces. Moreover fibre is used for general cleaning and polishing work.

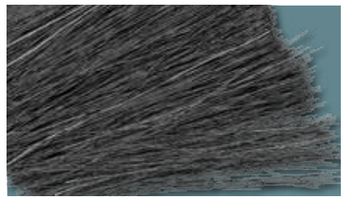

**ROS Horse Hair**
is an animal hair, which above all is deployed in terms of light cleaning and dusting work. Horse hair is resistant against diluted acids and bleaches. It's not chargeable for static electricity.

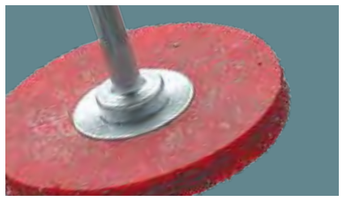

**Encapsulated Brushes**
Encapsulated brushes are ideal for an aggressive work on working pieces and for a very exact working in edges and angles.
By embedding steel wire, stainless steel wire, brass coated wire or brass wire in tough plastic, the filling width always remains the same and early break of the wires can be prevented. It's the perfect tool for long lasting and safe working. The advantages when working with encapsulated brushes are longer lifetime and harder brush effect.
Furthermore the risk of injury declines when using encapsulated brushes.
However, it might be possible that the brush will leave marks on the work piece.





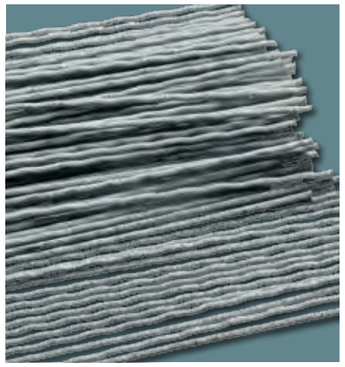

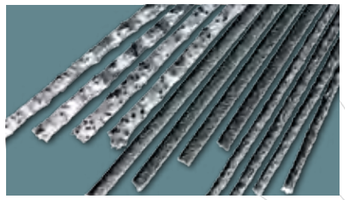

3 grits in silicon carbid

**Abrasive Filaments**
consist of polyamide bristles containing abrasive grits. This modern material is ideal for deburring work, fine surface finishing of plastic and metal parts as well as grinding, cleaning, polishing, and structuring of surfaces. With their flexible surface, brushes with abrasive filament align to the different shape of working pieces. Abrasive bristles also have grinding effects on the side, which makes them even more flexible to application possibilities. You can choose between grit (from K60 to K1000) composed of aluminium oxide (AO) and silicon carbide (SIC). Also diamond filament is available.

Normally 2 polyamide-types are used:
Polyamide PA 6:
- good bend recovery
- good abrasion resistance
- absorption of water to max. 10%

Polyamide PA 6.12 (ideal when working in wet surrounding):
- flexible and excellent bend recovery
- high abrasion resistance
- absorption of water to max. 3%

You can differ the bristles between round or flat bristles. Usually round bristles are used, because they are more flexible than flat bristles and very good for processing work pieces with strong shapes. Round bristles with a smaller diameter, less than 150 mm, are very efficient if you are not able to use flat material.
However, flat bristles possess a high abrasive grit, represent a long durability and a high removal rate by a larger contact surface.

Grits to choose from:

**Abrasive filaments SIC (filament K60 to K1000):**
- intensive results when deburring
- for surficial improvement/-processing
- mainly for process aluminium and stainless steel

**Common measurements:** K 80/1,1, K 80/1,2, K 80/1,4, K 120/0,6, K 120/1,1, K 180/0,9, K 180/1,0, K 320/0,60, K 500/0,5

**Abrasive filaments AO (filament K60 to K1000):**
- less sharp-edged compared to SIC
- to the finish of soft metal
- to polishing and smoothing
- to process aluminium when smoothing or polishing

**Common measurements:** K 80/1,2, K 120/1,1, K 180/0,9, K 180/1,0, K 240/0,75, K 240/0,90, K 320/0,60, K 500/0,25, K 500/0,50, K 600/0,3 – others on request.

**Diamonds filaments(filament K60 to K1000):**
- for aggressive applications
- used for materials with high material strength
- self-renewing through independent sharpening

By ordering our standard grit, also with small quantities you receive short delivery times!
The chemical components of nylon please find at **www.lessmann.com**

**Physical Characteristics**

| | STA | STH | ROF | ROH | RO4 | RO8 | STM / STL | MES |
|---|---|---|---|---|---|---|---|---|
| WNr. | | | 1.4301 | 1.4310 | 1.4401 | 1.4860 | | CuZn37 |
| AISI | | | 304 | 301 | 316 | | | |
| Tensile Strength in N/mm²* | 1,800 - 2,100 | 2,300 - 2,500 | 1,900 - 2,200 | 2,000 - 2,400 | 1,600 - 1,800 | 1,600 - 1,800 | 2,300 - 2.600 | 900 - 1,200 |
| Specific Gravity in g/cm³ | 7,85 | 7,85 | 7,85 | 7,85 | 7,85 | 7,90 | 7,85 | 8,50 |
| Temperature Consistancy in °C | + 300 °C | + 300 °C | + 450 °C | + 450 °C | + 500 °C | + 600 °C | + 300 °C | + 180 °C |

*The specified Tensile Strength is applicable for a wire strength 0.3 - 0.4 mm

LESSMANN®
THE GERMAN BRUSH COMPANY

# WHEEL BRUSHES

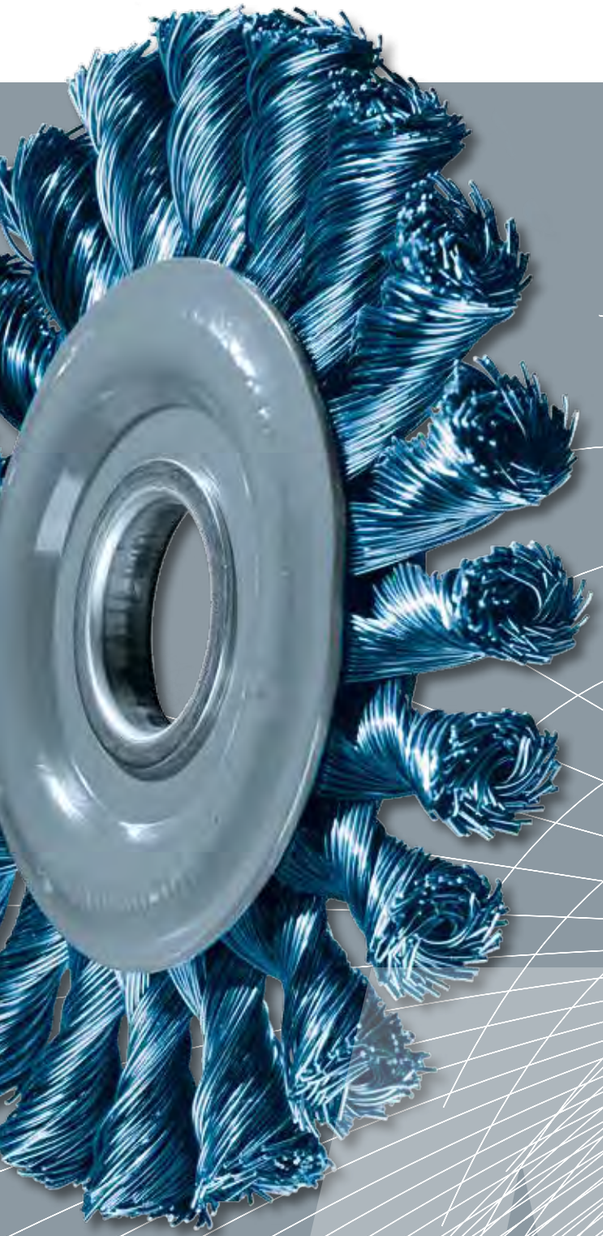

# Knot Wheel Brushes

**Knot Wheel Brushes**
Knot wheel brushes for grinders, angle grinders and stationary machines used in the preparation and reworking of bolt fillet and butt welds. They remove scale, rust, paint, slag, rubber residue and can be used for deburring.

**Knot Wheel Brushes with multiple Rows**
Ready mounted brushes with multiple rows have a dense filling compared to single segment brushes, which are assembled together. In your order please state the width of the brush, bore size and type and thickness of wire.

The listed knot wheel brushes are for the use in stationary machines.

**Stainless Steel Brushes**
LESSMANN-brushes with stainless steel have green side plates. We use wire with material number 1.4310. Material number 1.4401 can be used on request.
Information on working on stainless steel you find at www.lessmann.com

**Chunky packaging**
Many articles you receive as standard in handy covering boxes with 10 pcs.

All knots on our standard twisted wire wheel brushes are left hand twisted in order to minimize the undoing of the knots should the brush be used incorrectly.
On request we can supply right hand twist brushes.

We recommend to turn the brush during use in order to maintain sharpened wire ends.

On request other bores and wire diameter are available.

**Knot types ZF**

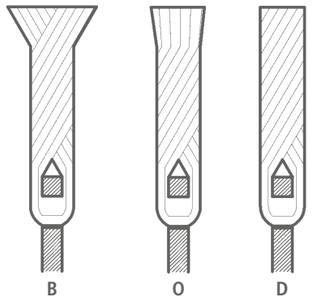


**B:** Rose Bud
**O:** Open Knot
(wire ends are cut)
**D:** Fully knotted
(wire ends are cut completely)

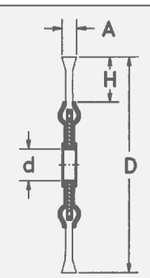


ZF = Knot type
Z = number of knots, R = number of rows

**Item Nos. in bold** are available ex stock.
Consider our minimum order value for *italic printed* article numbers (see page 139).

**STM** = brass coated steel, straight
**STH** = steel wire, high tensile, straight
**ROH** = stainless steel wire, high tensile, straight

EAN

**Knot Wheel Brushes, Steel Wire, Brass Wire**

| D mm \| *inch* | A mm \| *inch* | d mm \| *inch* | H | Z | ZF | R | RPM max. | Pack. | **STH 0.35** \| *0.014"* Art.-No. | **STH 0.50** \| *0.020"* Art.-No. | **STH 0.80** \| *0.031"* Art.-No. | **STM 0,50** \| *0.020"* Art.-No. | *left-right knotted* **STH 0.50** \| *0.020"* Art.-No. |
|---|---|---|---|---|---|---|---|---|---|---|---|---|---|
| 75 \| *3* | 10 \| *3/8* | 13 \| *1/2* | 15 | 18 | B | 1 | 25,000 | 1 | **470.111*** | **470.211*** | | | |
| 100 \| *4* | 12 \| *1/2* | M 14 x 2,0 | 22 | 18 | B | 1 | 12,500 | 1 | **471.117*** | **471.217*** | | | |
| 115 \| *4 1/2* | 14 \| *1/2* | 22.2 \| *7/8* | 24 | 20 | B | 1 | 12,500 | 1 | **472.111*** | **472.211*** | | **472.211.SM*** | **472.211.WZ*** |
| 115 \| *4 1/2* | 14 \| *1/2* | M 14 x 2,0 | 24 | 20 | B | 1 | 12,500 | 1 | **472.117*** | **472.217*** | | | |
| 125 \| *5* | 14 \| *1/2* | 22.2 \| *7/8* | 29 | 20 | B | 1 | 12,500 | 1 | **473.111*** | **473.211*** | | **473.211.SM*** | **473.211.WZ*** |
| 125 \| *5* | 14 \| *1/2* | M 14 x 2,0 | 29 | 20 | B | 1 | 12,500 | 1 | **473.117*** | **473.217*** | | | **473.217.WZ*** |
| 125 \| *5* | 14 \| *1/2* | 22.2 \| *7/8* | 29 | 24 | B | 1 | 12,500 | 1 | | **473.211.24** | | | |
| 150 \| *6* | 14 \| *1/2* | 22.2 \| *7/8* | 32 | 26 | B | 1 | 12,500 | 1 | **474.111*** | **474.211*** | *474.311* | | |
| 150 \| *6* | 14 \| *1/2* | M 14 x 2,0 | 32 | 26 | B | 1 | 12,500 | 1 | *474.117** | **474.217*** | *474.317* | | |
| 178 \| *7* | 14 \| *1/2* | 22.2 \| *7/8* | 38 | 32 | B | 1 | 12,500 | 1 | **475.111*** | **475.211*** | **475.311** | | |
| 178 \| *7* | 14 \| *1/2* | M 14 x 2,0 | 38 | 32 | B | 1 | 12,500 | 1 | *475.117** | **475.217*** | *475.317* | | |
| 200 \| *8* | 14 \| *1/2* | 22.2 \| *7/8* | 41 | 36 | B | 1 | 9,000 | 1 | **476.111** | **476.211** | **476.311** | | |
| 200 \| *8* | 14 \| *1/2* | 50.8 \| *2* | 41 | 36 | B | 1 | 9,000 | 1 | | *476.210.51* | available on demand | | |
| 230 | 14 \| *1/2* | 22.2 \| *7/8* | 56 | 40 | B | 1 | 9,000 | 1 | | *475.211* | | | |
| 250 \| *10* | 15 \| *5/8* | 50.8 \| *2*** | 42 | 52 | O | 1 | 5,000 | 1 | | **477.210.75** | *477.310.75* | | |
| 300 \| *12* | 18 \| *3/4* | 50.8 \| *2*** | 56 | 58 | O | 1 | 5,000 | 1 | | *478.210.75* | *478.310.75* | | |

EAN

**Knot Wheel Brushes, Stainless Steel Wire**

| D mm \| *inch* | A mm \| *inch* | d mm \| *inch* | H | Z | ZF | R | RPM max. | Pack. | **ROH 0.35** \| *0.014"* Art.-No. | **ROH 0.50** \| *0.020"* Art.-No. | *left-right knotted* **ROH 0.50** \| *0.020"* Art.-No. |
|---|---|---|---|---|---|---|---|---|---|---|---|
| 100 \| *4* | 12 \| *1/2* | M 14 x 2,0 | 22 | 18 | B | 1 | 12,500 | 1 | | **471.817*** | |
| 115 \| *4 1/2* | 14 \| *1/2* | 22.2 \| *7/8* | 24 | 20 | B | 1 | 12,500 | 1 | **472.711*** | **472.811*** | **472.811.WZ*** |
| 115 \| *4 1/2* | 14 \| *1/2* | M 14 x 2,0 | 24 | 20 | B | 1 | 12,500 | 1 | **472.717*** | **472.817*** | |
| 125 \| *5* | 14 \| *1/2* | 22.2 \| *7/8* | 29 | 20 | B | 1 | 12,500 | 1 | **473.711*** | **473.811*** | **473.811.WZ*** |
| 125 \| *5* | 14 \| *1/2* | M 14 x 2,0 | 29 | 20 | B | 1 | 12,500 | 1 | | **473.817*** | |
| 150 \| *6* | 14 \| *1/2* | 22.2 \| *7/8* | 32 | 26 | B | 1 | 12,500 | 1 | | **474.811*** | |
| 150 \| *6* | 14 \| *1/2* | M 14 x 2,0 | 32 | 26 | B | 1 | 12,500 | 1 | | **474.817** | |
| 178 \| *7* | 14 \| *1/2* | 22.2 \| *7/8* | 38 | 32 | B | 1 | 12,500 | 1 | | **475.811*** | |
| 178 \| *7* | 14 \| *1/2* | M 14 x 2,0 | 38 | 32 | B | 1 | 12,500 | 1 | | **475.817** | |

Thread 5/8 x 11 NC on request | * packed 10 pieces per carton | ** with turtle bore

# Knot Wheel Brushes, multiple rows

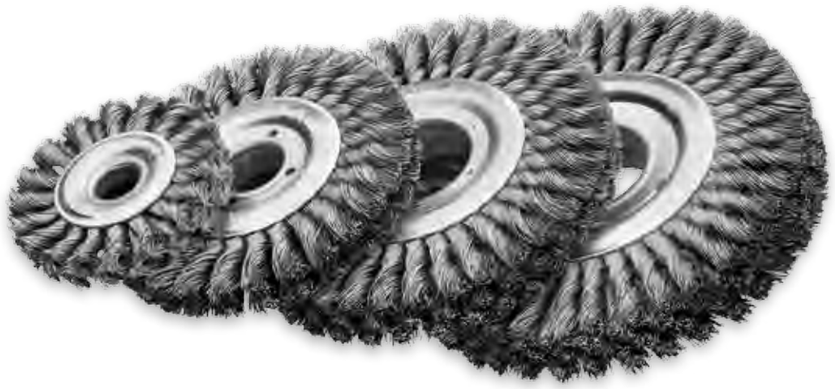

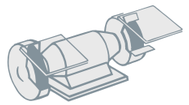

EAN

**Knot Wheel Brushes, multiple rows**

| D<br>mm \| *inch* | A | EB | d Stand<br>mm \| *inch* | d min | H | ZF | Z x R | RPM<br>max. | Pack. | **STH 0.35**<br>*0.014"* | **STH 0.50**<br>*0.020"* | **ROH 0.35**<br>*0.014"* | **ROH 0.50**<br>*0.020"* |
|---|---|---|---|---|---|---|---|---|---|---|---|---|---|
| 100 \| *4* | 22-24 | 12 | 20 \| *3/4* | 10 | 21 | B | 20 x 2 | 12,500 | 1 | *471.12K* | *471.22K* | *471.72K* | *471.82K* |
| 100 \| *4* | 30-32 | 18 | 20 \| *3/4* | 10 | 21 | B | 20 x 3 | 12,500 | 1 | *471.13K* | *471.23K* | *471.73K* | *471.83K* |
| 100 \| *4* | 34-36 | 25 | 20 \| *3/4* | 10 | 21 | B | 20 x 4 | 12,500 | 1 | *471.14K* | *471.24K* | *471.74K* | *471.84K* |
| 115 \| *4 1/2* | 22-24 | 18 | 30 \| *1 1/4* | 10 | 23.5 | B | 22 x 2 | 12,500 | 1 | *472.12K* | *472.22K* | *472.72K* | *472.82K* |
| 115 \| *4 1/2* | 30-32 | 25 | 30 \| *1 1/4* | 10 | 23.5 | B | 22 x 3 | 12,500 | 1 | *472.13K* | *472.23K* | *472.73K* | *472.83K* |
| 115 \| *4 1/2* | 34-36 | 30 | 30 \| *1 1/4* | 10 | 23.5 | B | 22 x 4 | 12,500 | 1 | *472.14K* | *472.24K* | *472.74K* | *472.84K* |
| 125 \| *5* | 22-24 | 18 | 30 \| *1 1/4* | 13 | 28.5 | B | 24 x 2 | 12,500 | 1 | *473.12K* | *473.22K* | *473.72K* | *473.82K* |
| 125 \| *5* | 30-32 | 25 | 30 \| *1 1/4* | 13 | 28.5 | B | 24 x 3 | 12,500 | 1 | *473.13K* | *473.23K* | *473.73K* | *473.83K* |
| 125 \| *5* | 34-36 | 30 | 30 \| *1 1/4* | 13 | 28.5 | B | 24 x 4 | 12,500 | 1 | *473.14K* | *473.24K* | *473.74K* | *473.84K* |
| 150 \| *6* | 22-24 | 18 | 30 \| *1 1/4* | 13 | 31.5 | O | 28 x 2 | 12,500 | 1 | *474.12K* | *474.22K* | *474.72K* | *474.82K* |
| 150 \| *6* | 30-32 | 25 | 30 \| *1 1/4* | 13 | 31.5 | O | 28 x 3 | 12,500 | 1 | *474.13K* | *474.23K* | *474.73K* | *474.83K* |
| 150 \| *6* | 36-38 | 30 | 30 \| *1 1/4* | 13 | 31.5 | O | 28 x 4 | 12,500 | 1 | *474.14K* | *474.24K* | *474.74K* | *474.84K* |
| 178 \| *7* | 22-24 | 18 | 50 \| *2* | 16 | 37.5 | O | 34 x 2 | 12,500 | 1 | *475.12K* | *475.22K* | *475.72K* | *475.82K* |
| 178 \| *7* | 30-32 | 25 | 50 \| *2* | 16 | 37.5 | O | 34 x 3 | 12,500 | 1 | *475.13K* | *475.23K* | *475.73K* | *475.83K* |
| 178 \| *7* | 36-38 | 30 | 50 \| *2* | 16 | 37.5 | O | 34 x 4 | 12,500 | 1 | *475.14K* | *475.24K* | *475.74K* | *475.84K* |
| 200 \| *8* | 22-24 | 18 | 50 \| *2* | 16 | 41 | O | 38 x 2 | 9,000 | 1 | *476.12K* | *476.22K* | *476.72K* | *476.82K* |
| 200 \| *8* | 30-32 | 25 | 50 \| *2* | 16 | 41 | O | 38 x 3 | 9,000 | 1 | *476.13K* | *476.23K* | *476.73K* | *476.83K* |
| 200 \| *8* | 36-38 | 30 | 50 \| *2* | 16 | 41 | O | 38 x 4 | 9,000 | 1 | *476.14K* | *476.24K* | *476.74K* | *476.84K* |
| 250 \| *10* | 26-30 | 18 | 100 \| *4* | 20 | 42 | O | 52 x 2 | 5,000 | 1 | *477.12K* | *477.22K* | *477.72K* | *477.82K* |
| 250 \| *10* | 38-40 | 26 | 100 \| *4* | 20 | 42 | O | 52 x 3 | 5,000 | 1 | *477.13K* | *477.23K* | *477.73K* | *477.83K* |
| 250 \| *10* | 50-54 | 34 | 100 \| *4* | 20 | 42 | O | 52 x 4 | 5,000 | 1 | *477.14K* | *477.24K* | *477.74K* | *477.84K* |
| 300 \| *12* | 26-30 | 18 | 100 \| *4* | 30 | 56 | O | 58 x 2 | 5,000 | 1 | *478.12K* | *478.22K* | *478.72K* | *478.82K* |
| 300 \| *12* | 38-40 | 26 | 100 \| *4* | 30 | 56 | O | 58 x 3 | 5,000 | 1 | *478.13K* | *478.23K* | *478.73K* | *478.83K* |
| 300 \| *12* | 50-54 | 34 | 100 \| *4* | 30 | 56 | O | 58 x 4 | 5,000 | 1 | *478.14K* | *478.24K* | *478.74K* | *478.84K* |

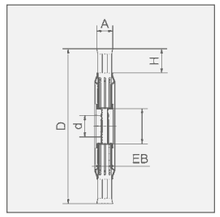




# Joint Cleaning Brushes

**Joint Cleaning Brushes**

| D<br>mm \| *inch* | A<br>mm \| *inch* | d<br>mm \| *inch* | H | Z | ZF | R | RPM<br>max. | Pack. | **STA 0.50** \| *0.020"*<br>Art.-No. | **STA 0.80** \| *0.031"*<br>Art.-No. | **STM 0.50** \| *0.020"*<br>Art.-No. |
|---|---|---|---|---|---|---|---|---|---|---|---|
| 300 \| *12* | 6 \| *1/4* | 20 \| *3/4* | 67 | 64 | D | 1 | 5,000 | 5 | **478.200.06** | *478.300.06* | *478.500.06* |
| 300 \| *12* | 8 \| *5/16* | 20 \| *3/4* | 67 | 64 | D | 1 | 5,000 | 5 | **478.200.08** | **478.300.08** | *478.500.08* |
| 300 \| *12* | 10 \| *3/8* | 20 \| *3/4* | 67 | 64 | D | 1 | 5,000 | 5 | **478.200.10** | *478.300.10* | |
| 300 \| *12* | 6 \| *1/4* | 25.4 \| *1* | 67 | 64 | D | 1 | 5,000 | 5 | *478.225.06* | *478.325.06* | |
| 300 \| *12* | 8 \| *5/16* | 25.4 \| *1* | 67 | 64 | D | 1 | 5,000 | 5 | *478.225.08* | *478.325.08* | |
| 300 \| *12* | 10 \| *3/8* | 25.4 \| *1* | 67 | 64 | D | 1 | 5,000 | 5 | *478.225.10* | *478.325.10* | |

**Joint Cleaning Brushes**
Joint cleaning brushes are used for the production of expansion joints in the construction of new linings as well as in restoration and reparation. The application of this knot wheel brush is usually alike with all pavements.

When treating concrete and mastic asphalt joints, mainly knots with a tough wire without rose bud are used, because those knots show superb resistance.

Brushes with brass coated steel wire STM are very stable, hence they are often used for cleaning concrete joints.

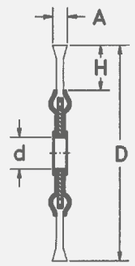


ZF = Knot type
Z = number of knots, R = number of rows

**Item Nos. in bold** are available ex stock.
Consider our minimum order value for *italic printed* article numbers (see page 139).

**STA** = steel wire, straight
**STH** = steel wire, high tensile, straight
**STM** = brass coated steel, straight
**ROH** = stainless steel wire, high tensile, straight

# Pipeline Brushes / Stringer Bead Brushes

**Pipeline-Brushes / Stringer Bead Brushes**
LESSMANN-Pipelinebrushes are specially developed for professional use on U- and V-welds in the pipeline industry.

The remarkable features of the high quality LESSMANN Pipeline Brushes are the long lifetime and the quietness of running. They are especially narrow and therefore they are the perfect tool for cleaning all welds at tube connections.

**Pipeline Brushes / Stringer Bead Brushes, left-right knotted**
Left-right knotted pipeline brushes usually are more aggressive, hence they are often used for heavy brushing operations.
Besides the knots open less, therefore there are ideal for the treatment of edges.

**Stainless Steel Brushes**
LESSMANN-brushes with stainless steel wire have green side plates. We use wire with material number 1.4310. Material number 1.4401 can be used on request.
Information on working on stainless steel you find at www.lessmann.com

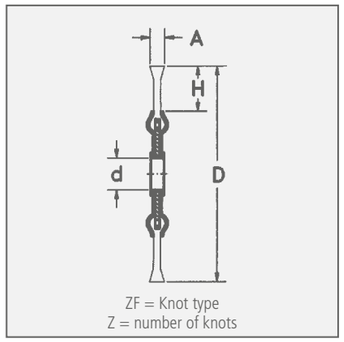


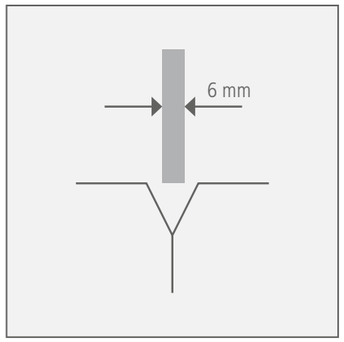


**Item Nos. in bold** are available ex stock.
Consider our minimum order value for *italic printed* article numbers (see page 139).

**STH** = steel wire, high tensile, straight

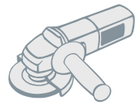

| Pipeline-Brushes / Stringer Bead Brushes, Steel Wire | | | | | | | Bo. 22.2 \| *7/8"* | M 14 x 2.0 | W 5/8 x 11 NC |
|---|---|---|---|---|---|---|---|---|---|
| D mm \| *inch* | A mm \| *inch* | H | Z | ZF | RPM max. | Pack.* | **STH 0.50** \| *0.020"* Art.-No. | **STH 0.50** \| *0.020"* Art.-No. | **STH 0.50** \| *0.020"* Art.-No. |
| 100 \| *4* | 6 \| *1/4* | 19 | 28 | D | 20,000 | 10 | available on demand | **471.207.28** | *471.208.28* |
| 115 \| *4 1/2* | 6 \| *1/4* | 22 | 32 | D | 15,000 | 1 | **472.201.EZ** | | |
| 115 \| *4 1/2* | 6 \| *1/4* | 22 | 32 | D | 15,000 | 5/10 | **472.201.32** | *472.207.32* | *472.208.32* |
| 115 \| *4 1/2* | 6 \| *1/4* | 22 | 39 | D | 15,000 | 10 | **472.201.39** | available on demand | available on demand |
| 125 \| *5* | 6 \| *1/4* | 26 | 40 | D | 15,000 | 1 | **473.201.EZ** | | |
| 125 \| *5* | 6 \| *1/4* | 26 | 40 | D | 15,000 | 5/10 | **473.201.40** | **473.207.40** | *473.208.40* |
| 150 \| *6* | 6 \| *1/4* | 30 | 48 | D | 12,500 | 5/10 | **474.201.48** | *474.207.48* | *474.208.48* |
| 178 \| *7* | 6 \| *1/4* | 36 | 48 | D | 12,500 | 1 | **475.201.EZ** | | |
| 178 \| *7* | 6 \| *1/4* | 36 | 48 | D | 12,500 | 5/10 | **475.201.48** | *475.207.48* | *475.208.48* |
| 178 \| *7* | 6 \| *1/4* | 30 | 56 | D | 12,500 | 5/10 | **475.201.56** | *475.207.56* | *475.208.56* |
| 178 \| *7* | 6 \| *1/4* | 30 | 76 | D | 12,500 | 5/10 | **475.201.76** | *475.207.76* | *475.208.76* |
| 230 | 6 \| *1/4* | 56 | 76 | D | 12.500 | 1 | *475.201.76* | | |

* Brushes with thread = packed 5 pieces per carton, brushes with bore = packed 10 pieces per carton

# Pipeline Brushes / Stringer Bead Brushes

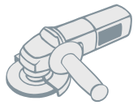

| Pipeline-Brushes / Stringer Bead Brushes, Stainless Steel | | | | | | | Bo. 22.2 \| *7/8"* | M 14 x 2.0 | W 5/8 x 11 NC |
|---|---|---|---|---|---|---|---|---|---|
| D<br>mm \| *inch* | A<br>mm \| *inch* | H | Z | ZF | RPM<br>max. | Pack.* | **ROH 0.50** \| *0.020"*<br>Art.-No. | **ROH 0.50** \| *0.020"*<br>Art.-No. | **ROH 0.50** \| *0.020"*<br>Art.-No. |
| 100 \| *2* | 6 \| *1/4* | 19 | 28 | D | 20,000 | 10 | available on demand | **471.807.28** | *471.808.28* |
| 115 \| *4 1/2* | 6 \| *1/4* | 22 | 32 | D | 15,000 | 1 | **472.801.EZ** | | |
| 115 \| *4 1/2* | 6 \| *1/4* | 22 | 32 | D | 15,000 | 5/10* | **472.801.32** | *472.807.32* | *472.808.32* |
| 115 \| *4 1/2* | 6 \| *1/4* | 22 | 39 | D | 15,000 | 10 | **472.801.39** | available on demand | available on demand |
| 125 \| *5* | 6 \| *1/4* | 26 | 40 | D | 15,000 | 1 | **473.801.EZ** | | |
| 125 \| *5* | 6 \| *1/4* | 26 | 40 | D | 15,000 | 5/10* | **473.801.40** | **473.807.40** | *473.808.40* |
| 150 \| *6* | 6 \| *1/4* | 30 | 48 | D | 12,500 | 5/10* | **474.801.48** | *474.807.48* | *474.808.48* |
| 178 \| *7* | 6 \| *1/4* | 36 | 48 | D | 12,500 | 5/10* | **475.801.48** | *475.807.48* | *475.808.48* |
| 178 \| *7* | 6 \| *1/4* | 30 | 56 | D | 12,500 | 5/10* | *475.801.56* | *475.807.56* | *475.808.56* |
| 178 \| *7* | 6 \| *1/4* | 30 | 76 | D | 12,500 | 5/10* | *475.801.76* | *475.807.76* | *475.808.76* |

* Brushes with thread = packed 5 pieces per carton, brushes with bore = packed 10 pieces per carton

1 2 3

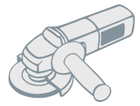

| 1 Pipeline-Brushes / Stringer Bead Brushes, rose bud | | | | | | | | |
|---|---|---|---|---|---|---|---|---|
| D<br>mm \| *inch* | A<br>mm \| *inch* | d<br>mm \| *inch* | H | Z | ZF | RPM<br>max. | Pack. | **STH 0.50** \| *0.020"*<br>Art.-No. |
| 178 \| *7* | 6 \| *1/4* | 22.2 \| *7/8* | 28 | 76 | B | 12,500 | 10 | **475.2B1.76** |

| 2 Pipeline-Brushes / Stringer Bead Brushes, left-right knotted | | | | | | | | |
|---|---|---|---|---|---|---|---|---|
| D<br>mm \| *inch* | A<br>mm \| *inch* | d<br>mm \| *inch* | H | Z | ZF | RPM<br>max. | Pack. | **STH 0.50** \| *0.020"*<br>Art.-No. |
| 178 \| *7* | 6 \| *1/4* | 22.2 \| *7/8* | 28 | 76 | D | 12,500 | 10 | *475.2W1.76* |

| 3 Pipeline-Brushes / Stringer Bead Brushes, encapsulated | | | | | | | | |
|---|---|---|---|---|---|---|---|---|
| D<br>mm \| *inch* | A<br>mm \| *inch* | d<br>mm \| *inch* | H | | | RPM<br>max. | Pack. | **STM 0.35** \| *0.014"*<br>Art.-No. |
| 150 \| *6* | 6 \| *1/4* | 22.2 \| *7/8* | 29 | | | 9,000 | 10 | *300.771.KG* |
| 178 \| *7* | 6 \| *1/4* | 22.2 \| *7/8* | 43 | | | 9,000 | 10 | *351.771.KG* |

**Pipeline Brushes / Stringer Bead Brushes with rose bud**
Knotted brushes with rose bud have a longer life time. They are used for a professional treatment of weld seams in the tube and pipeline construction.

**Pipeline Brushes / Stringer Bead Brushes, left-right knotted**
Left-right knotted pipeline brushes usually are more aggressive, hence they are often used for heavy brushing operations.
Besides the knots open less, therefore they are ideal for the treatment of edges.

**Pipeline Brushes / Stringer Bead Brushes, encapsulated**
With encapsulated pipeline brushes a very exact and precise working is possible. By embedding in tough plastic the filling width always remains the same and early break of the wires can be prevented.
A working width of 6 mm still allows to reach U- and V- weld seams.

**Item Nos. in bold** are available ex stock.
Consider our minimum order value for *italic printed* article numbers (see page 139).

**STH** = steel wire, high tensile, straight
**STM** = brass coated steel, crimped
**ROH** = stainless steel wire, high tensile, straight

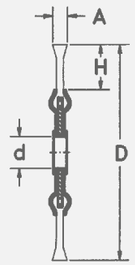


ZF = Knot type
Z = number of knots

# Single Segment Brushes

**Single Segment Brushes**
These brushes are mainly used for deburring purposes in stationary machines or processing centres.
The construction of these brushes allows it to assemble them to roller brushes of any desired width. Many different filling materials like steel, stainless steel or abrasive nylon with various grit are at your disposal.

**Outstanding Processing**
The flexible bristles align to the different shapes of working pieces.
An important advantage of the single segment brushes compared to other grinding tools, such as pads or grinding discs, is their gentle treatment.
Furthermore the brushes do not become encrusted. They are suitable for deburring work and fine polishing of stainless steel, light metal or plastic material. Besides the executions listed on this page other diameters and grit sizes are available.

**Stainless Steel Brushes**
LESSMANN-brushes with stainless steel wire have a laser imprint.
Information on working on stainless steel you find at www.lessmann.com

Laser imprint of brushes

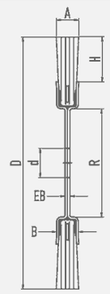


**„A"** can be up to 4 mm larger than **„B"**

**EB 3,0 mm with R > 60**
**EB 2,4 mm with R ≤ 60**

For further information on abrasive filaments please see page 13.
**Item Nos. in bold** are available ex stock.
Consider our minimum order value for *italic printed* article numbers (see page 139).

**SIC** = silicon carbide bristles

1

2

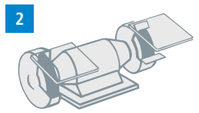

**1 Single Segment Wheel Brushes, Silicon Carbide Bristles**

| D mm \| *inch* | R | B | H | d Stand. mm \| *inch* | d min./max. | RPM max. | Pack. | SIC 80/1.2 Art.-No. | SIC 120/1.1 Art.-No. | SIC 120/0.6 Art.-No. | SIC 180/1.0 Art.-No. | SIC 320/0.6 Art.-No. |
|---|---|---|---|---|---|---|---|---|---|---|---|---|
| 80 \| *3 1/4* | 26 | 12 | 17 | 12 \| *1/2* | 12-16 | 12,000 | 5 | | available on demand | *310.841* | **310.851** | *310.871* |
| 100 \| *2* | 30 | 12 | 21 | 12 \| *1/2* | 12-20 | 8,000 | 5 | *320.821* | available on demand | **320.841** | **320.851** | **320.871** |
| 125 \| *5* | 30 | 12 | 33 | 12 \| *1/2* | 12-20 | 8,000 | 5 | *330.821* | available on demand | **330.841** | **330.851** | *330.871* |
| 150 \| *6* | 50 | 14 | 32 | 12 \| *1/2* | 12-30 | 6,000 | 5 | **340.821** | **340.831** | **340.841** | **340.851** | **340.871** |
| 178 \| *7* | 50 | 14 | 46 | 12 \| *1/2* | 12-30 | 6,000 | 5 | *350.821* | *350.831* | **350.841** | *350.851* | *350.871* |
| 178 \| *7* | 60 | 16 | 43 | 12 \| *1/2* | 12-40 | 6,000 | 5 | | available on demand | *351.841* | *351.851* | *351.871* |
| 200 \| *8* | 60 | 16 | 54 | 12 \| *1/2* | 12-40 | 6,000 | 5 | | *361.831* | *361.841* | *361.851* | *361.871* |
| 200 \| *8* | 80 | 16 | 43 | 16 \| *5/8* | 16-60 | 6,000 | 5 | | available on demand | *362.841* | **362.851** | *362.871* |
| 200 \| *8* | 100 | 16 | 32 | 16 \| *5/8* | 16-80 | 6,000 | 5 | | *360.831* | **360.841** | **360.851** | **360.871** |
| 250 \| *10* | 100 | 16 | 57 | 16 \| *5/8* | 16-80 | 6,000 | 5 | | available on demand | *370.841* | **370.851** | **370.871** |
| 250 \| *10* | 120 | 16 | 45 | 20 \| *3/4* | 20-100 | 3,600 | 5 | | available on demand | *371.841* | *371.851* | *371.871* |
| 250 \| *10* | 150 | 19 | 30 | 25.4 \| *1* | 25-130 | 3,600 | 5 | | *372.831* | *372.841* | *372.851* | *372.871* |
| 300 \| *12* | 120 | 16 | 70 | 20 \| *3/4* | 20-100 | 3,600 | 5 | | available on demand | *380.841* | *380.851* | *380.871* |
| 300 \| *12* | 150 | 19 | 35 | 25.4 \| *1* | 25-130 | 3,600 | 5 | | *381.831* | *381.841* | *381.851* | *381.871* |
| 300 \| *12* | 200 | 19 | 30 | *25.4* \| *1* | 25.4-170 | 2,600 | 5 | | | *38T.841* | *38T.851* | |

**2 Single Segment Wheel Brushes, Silicon Carbide Bristles, 2 rows**

| D mm \| *inch* | R | B | H | d Stand. mm \| *inch* | d min./max. | RPM max. | Pack. | SIC 120/0.6 Art.-No. | SIC 180/1.0 Art.-No. | SIC 320/0.6 Art.-No. |
|---|---|---|---|---|---|---|---|---|---|---|
| 200 \| *8* | 80 | 27 | 43 | 16 \| *5/8* | 16-60 | 6,000 | 5 | available on demand | *362.852* | available on demand |
| 250 \| *10* | 100 | 27 | 58 | 16 \| *5/8* | 16-80 | 6,000 | 5 | available on demand | *370.852* | available on demand |

Bore must be indicated in the order. Standard bore delivery ex stock, short termed. Other bores are available with extra charge: 1 - 10 pcs. EUR 5,00 / 11 - 25 pcs. EUR 3,00

# Single Segment Wheel Brushes

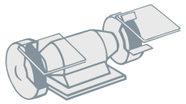

## Single Segment Wheel Brushes, Steel Wire

| D mm \| *inch* | R | B | H | d Stand. mm \| *inch* | d min./max. | RPM max. | Pack. | 1 STA 0.20 \| *0.008"* Art.-No. | 1 STA 0.30 \| *0.012"* Art.-No. | 2 STL 0.35 \| *0.014"* Art.-No. |
|---|---|---|---|---|---|---|---|---|---|---|
| 80 \| *3 1/4* | 26 | 12 | 17 | 12 \| *1/2* | 12-16 | 12,000 | 5 | **310.141** | *310.161* | available on demand |
| 100 \| *4* | 30 | 12 | 21 | 12 \| *1/2* | 12-20 | 8,000 | 5 | **320.141** | **320.161** | *320.707* |
| 125 \| *5* | 30 | 12 | 33 | 12 \| *1/2* | 12-20 | 8,000 | 5 | *330.141* | *330.161* | available on demand |
| 125 \| *5* | 40 | 12 | 29 | 12 \| *1/2* | 12-25 | 8,000 | 5 | available on demand | *331.161* | available on demand |
| 150 \| *6* | 50 | 14 | 32 | 12 \| *1/2* | 12-30 | 6,000 | 5 | **340.141** | **340.161** | *340.707* |
| 178 \| *7* | 50 | 14 | 46 | 12 \| *1/2* | 12-30 | 6,000 | 5 | *350.141* | **350.161** | available on demand |
| 178 \| *7* | 60 | 16 | 43 | 12 \| *1/2* | 12-40 | 6,000 | 5 | *351.141* | *351.161* | *351.707* |
| 200 \| *8* | 60 | 16 | 54 | 12 \| *1/2* | 12-40 | 6,000 | 5 | *361.141* | *361.161* | available on demand |
| 200 \| *8* | 80 | 16 | 43 | 16 \| *5/8* | 16-60 | 6,000 | 5 | *362.141* | *362.161* | *362.707* |
| 200 \| *8* | 100 | 16 | 32 | 16 \| *5/8* | 16-80 | 6,000 | 5 | **360.141** | **360.161** | *360.707* |
| 250 \| *10* | 100 | 16 | 57 | 16 \| *5/8* | 16-80 | 6,000 | 5 | *370.141* | **370.161** | available on demand |
| 250 \| *10* | 120 | 16 | 45 | 20 \| *3/4* | 20-100 | 3,600 | 5 | *371.141* | *371.161* | available on demand |
| 300 \| *12* | 120 | 16 | 70 | 20 \| *3/4* | 20-100 | 3,600 | 5 | *380.141* | *380.161* | available on demand |
| 300 \| *12* | 150 | 19 | 55 | 25.4 \| *1* | 25.4-130 | 3,600 | 5 | | *381.161* | |

## Single Segment Wheel Brushes, Steel Wire, 2 rows

| D mm \| *inch* | R | B | H | d Stand. mm \| *inch* | d min./max. | RPM max. | Pack. | STH 0.35 \| *0.014"* Art.-No. |
|---|---|---|---|---|---|---|---|---|
| 200 \| *8* | 80 | 20 | 43 | 16 \| *5/8* | 16-60 | 6,000 | 5 | *362.272* |
| 250 \| *10* | 100 | 20 | 58 | 16 \| *5/8* | 16-80 | 6,000 | 5 | *370.272* |

Bore must be indicated in the order. Standard bore delivery ex stock, short termed. Other bores are available with extra charge: 1 - 10 pcs. EUR 5,00 / 11 - 25 pcs. EUR 3,00

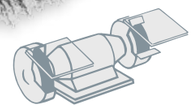

## Single Segment Wheel Brushes, Stainless Steel Wire

| D mm \| *inch* | R | B | H | d Stand. mm \| *inch* | d min./max. | RPM max. | Pack. | ROF 0.20 \| *0.008"* Art.-No. | ROF 0.30 \| *0.012"* Art.-No. |
|---|---|---|---|---|---|---|---|---|---|
| 80 \| *3 1/4* | 26 | 12 | 17 | 12 \| *1/2* | 12-16 | 12,000 | 5 | *310.341* | *310.361* |
| 100 \| *2* | 30 | 12 | 21 | 12 \| *1/2* | 12-20 | 8,000 | 5 | **320.341** | **320.361** |
| 125 \| *5* | 30 | 12 | 33 | 12 \| *1/2* | 12-20 | 8,000 | 5 | *330.341* | **330.361** |
| 125 \| *5* | 40 | 12 | 29 | 12 \| *1/2* | 12-25 | 8,000 | 5 | available on demand | *331.361* |
| 150 \| *6* | 50 | 14 | 32 | 12 \| *1/2* | 12-30 | 6,000 | 5 | **340.341** | **340.361** |
| 178 \| *7* | 50 | 14 | 46 | 12 \| *1/2* | 12-30 | 6,000 | 5 | *350.341* | **350.361** |
| 178 \| *7* | 60 | 16 | 43 | 12 \| *1/2* | 12-40 | 6,000 | 5 | *351.341* | *351.361* |
| 200 \| *8* | 60 | 16 | 54 | 12 \| *1/2* | 12-40 | 6,000 | 5 | *361.341* | *361.361* |
| 200 \| *8* | 80 | 16 | 43 | 16 \| *5/8* | 16-60 | 6,000 | 5 | *362.341* | *362.361* |
| 200 \| *8* | 100 | 16 | 32 | 16 \| *5/8* | 16-80 | 6,000 | 5 | *360.341* | **360.361** |
| 250 \| *10* | 100 | 16 | 57 | 16 \| *5/8* | 16-80 | 6,000 | 5 | *370.341* | *370.361* |
| 250 \| *10* | 120 | 16 | 45 | 20 \| *3/4* | 20-100 | 6,000 | 5 | *371.341* | *371.361* |
| 300 \| *12* | 120 | 16 | 70 | 20 \| *3/4* | 20-100 | 3,600 | 5 | *380.341* | *380.361* |
| 300 \| *12* | 150 | 19 | 55 | 25.4 \| *1* | 25.4-130 | 3,600 | 5 | | *381.361* |

Bore must be indicated in the order. Standard bore delivery ex stock, short termed. Other bores are available with extra charge: 1 - 10 pcs. EUR 5,00 / 11 - 25 pcs. EUR 3,00

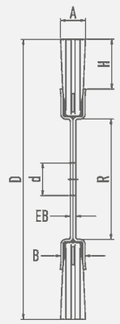


**„A"** can be up to 4 mm larger than **„B"**
**EB 3,0 mm with R > 60**
**EB 2,4 mm with R ≤ 60**

For further information on abrasive filaments please see page 13.
**Item Nos. in bold** are available ex stock.
Consider our minimum order value for *italic printed* article numbers (see page 139).

**STA** = steel wire, crimped
**STH** = steel wire, high tensile, crimped
**STL** = cord wire, crimped
**ROF** = stainless steel wire, crimped

# Wheel Brushes

**Wheel Brushes**
Wheel brushes filled with crimped wire are used for the purpose of obtaining different surface finishing:
- the removal of rust, paint and dirt
- for roughening, deburring, stripping or polishing.

**Big or Small?**
A decisive factor for choosing the most suitable brush is the wire and tube diameter. Brushes with a larger tube diameter (measure R) are filled with more wire, are more aggressive and have a longer life.
In our catalogue are the usual tube diameters – other diameters can also be supplied.
More technical instruction such as peripheral speed etc. see pages 8 - 10.

The bore must be indicated in the order. Without any instruction delivery will be with standard bore "d Stand".

**Stainless Steel Brushes**
Information on working on stainless steel you find at www.lessmann.com

**Other filling materials, filling diameters and special executions**
Take advantage of the LESSMANN range of products, of the experience in developing and producing brushes! We are able to produce special executions on demand.

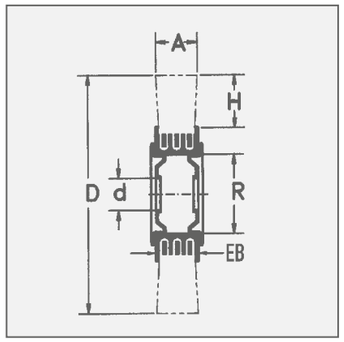


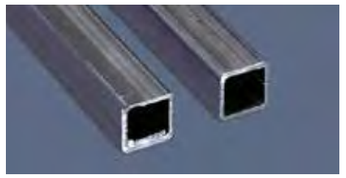

Plate with tube 80 and 100 (Set 4 / 5)

**Item Nos. in bold** are available ex stock.
Consider our minimum order value for *italic printed* article numbers (see page 139).

**STA** = steel wire, crimped
**STM** = brass coated steel, crimped

**Adapter Set**
All brushes are supplied with adapter sets for easy mounting on all popular grinding machines. The adapters have the following dimensions:

**Set 1** / tube 30:
30 / 1" / 22,2 / 20 / 16 / 1/2" / 12
**Set 2** / tube 40:
40 / 32 / 1" / 22.2 / 20 / 16 / 1/2"
**Set 3** / tube 50:
50 / 32 / 1" / 22.2 / 20 / 16 / 1/2"
**Set 4** / tube 80 + 100:
brushes with metal discs, bore 50.8 and double keyway 7x13; plus adapter to bore 30.
**Set 5** / tube 80 + 100:
brushes with metal discs, bore 50.8 and double keyway 7x13; plus adapter to bore 32.

By usage without adapter set the actual size might be up to 0.2 mm below nominal size.

1 2

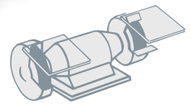

EAN

**Wheel Brushes, Steel Wire**

| D mm \| *inch* | A | EB | R | H | d Stand. mm \| *inch* | d min./max. | RPM max. | Pack. | 1 STA 0.15 \| *0.006"* Art.-No. | 1 STA 0.20 \| *0.008"* Art.-No. | 1 STA 0.30 / 0.35* *0.012" / 0.014"* | 2 STM 0.30 \| *0.012"* Art.-No. |
|---|---|---|---|---|---|---|---|---|---|---|---|---|
| 80 \| *3 1/4* | 18-20 | 18 | 20 | 20 | 10 \| *3/8* | 10-20 | 10,000 | 1 | available on demand | **312.142** | **312.162** | |
| 80 \| *3 1/4* | 25-27 | 24 | 20 | 20 | 10 \| *3/8* | 10-20 | 10,000 | 1 | available on demand | *312.143* | **312.163** | |
| 100 \| *4* | 20-22 | 19 | 30 | 23 | Set 1 | 10-30 | 8,000 | 1 | *323.132* | **323.142** | **323.162** | |
| 100 \| *4* | 28-30 | 25 | 30 | 23 | Set 1 | 10-30 | 8,000 | 1 | *323.133* | **323.143** | **323.163** | |
| 125 \| *5* | 21-23 | 20 | 40 | 27 | Set 2 | 13-40 | 6,000 | 1 | *334.132* | **334.142** | **334.162** | |
| 125 \| *5* | 29-31 | 26 | 40 | 27 | Set 2 | 13-40 | 6,000 | 1 | available on demand | *334.143* | **334.163** | |
| 150 \| *6* | 22-24 | 20 | 40 | 33 | Set 2 | 13-40 | 6,000 | 1 | *344.132* | **344.142** | **344.172*** | |
| 150 \| *6* | 30-34 | 26 | 40 | 33 | Set 2 | 13-40 | 6,000 | 1 | *344.133* | **344.143** | **344.173*** | |
| 150 \| *6* | 23-25 | 22 | 50 | 33 | Set 3 | 13-50 | 6,000 | 1 | *345.132* | **345.142** | **345.162** | *345.762* |
| 150 \| *6* | 30-34 | 29 | 50 | 33 | Set 3 | 13-50 | 6,000 | 1 | *345.133* | **345.143** | **345.163** | |
| 178 \| *7* | 23-26 | 22 | 50 | 37 | Set 3 | 16-50 | 6,000 | 1 | available on demand | **355.142** | **355.162** | *355.762* |
| 178 \| *7* | 32-35 | 29 | 50 | 37 | Set 3 | 16-50 | 6,000 | 1 | *355.133* | **355.143** | **355.163** | |
| 200 \| *8* | 24-27 | 22 | 50 | 48 | Set 3 | 16-50 | 6,000 | 1 | *365.132* | **365.142** | **365.172*** | |
| 200 \| *8* | 35-38 | 29 | 50 | 48 | Set 3 | 16-50 | 6,000 | 1 | *365.133* | **365.143** | **365.173*** | |
| 200 \| *8* | 28-32 | 25 | 80 | 38 | Set 4+1 | 16-80 | 4,500 | 1 | available on demand | **366.142** | **366.162** | *366.762* |
| 200 \| *8* | 40-45 | 33 | 80 | 38 | Set 4+1 | 16-80 | 4,500 | 1 | available on demand | *366.143* | **366.163** | |
| 250 \| *10* | 30-35 | 25 | 80 | 50 | Set 4+1 | 20-80 | 3,600 | 1 | available on demand | **376.142** | **376.162** | |
| 250 \| *10* | 42-45 | 33 | 80 | 50 | Set 4+1 | 20-80 | 3,600 | 1 | available on demand | available on demand | **376.163** | |
| 250 \| *10* | 32-37 | 26 | 100 | 50 | Set 4+1 | 20-100 | 3,600 | 1 | available on demand | **377.142** | **377.162** | *377.762* |
| 250 \| *10* | 43-48 | 35 | 100 | 50 | Set 4+1 | 20-100 | 3,600 | 1 | available on demand | *377.143* | **377.163** | |
| 250 \| *10* | 55-60 | 45 | 100 | 50 | Set 4+1 | 20-100 | 3,600 | 1 | available on demand | *377.144* | **377.164** | |
| 300 \| *12* | 35-40 | 26 | 100 | 60 | Set 4 | 30-100 | 3,000 | 1 | available on demand | **387.142** | **387.162** | |
| 300 \| *12* | 47-52 | 35 | 100 | 60 | Set 4 | 30-100 | 3,000 | 1 | available on demand | *387.143* | **387.163** | |
| 350 \| *14* | 35-40 | 26 | 100 | 85 | Set 5 | 32-100 | 2,400 | 1 | available on demand | *397.142* | **397.172*** | |
| 350 \| *14* | 55-60 | 35 | 100 | 85 | Set 5 | 32-100 | 2,400 | 1 | available on demand | *397.143* | **397.173*** | |

Bore must be indicated in the order. Standard bore delivery ex stock, short termed. Other bores are available with extra charge: 1 - 10 pcs. EUR 5.00 / 11 - 25 pcs. EUR 3.00

# Wheel Brushes

## Wheel Brushes, Stainless Steel

| D mm \| *inch* | A | EB | R | H | d Stand. mm \| *inch* | d min./max. | RPM max. | Pack. | **ROF 0.20** \| *0.008"* Art.-No. | **ROF 0.30** \| *0.012"* Art.-No. |
|---|---|---|---|---|---|---|---|---|---|---|
| 80 \| *3 1/4* | 18-20 | 18 | 20 | 20 | 10 \| *3/8* | 10-20 | 10,000 | 1 | *312.342* | **312.362** |
| 80 \| *3 1/4* | 25-27 | 24 | 20 | 20 | 10 \| *3/8* | 10-20 | 10,000 | 1 | available on demand | *312.363* |
| 100 \| *4* | 20-22 | 19 | 30 | 23 | Set 1 | 10-30 | 8,000 | 1 | *323.342* | **323.362** |
| 100 \| *4* | 28-30 | 25 | 30 | 23 | Set 1 | 10-30 | 8,000 | 1 | *323.343* | **323.363** |
| 125 \| *5* | 21-23 | 20 | 40 | 27 | Set 2 | 13-40 | 6,000 | 1 | *334.342* | **334.362** |
| 125 \| *5* | 29-31 | 26 | 40 | 27 | Set 2 | 13-40 | 6,000 | 1 | *334.343* | **334.363** |
| 150 \| *6* | 22-24 | 20 | 40 | 33 | Set 2 | 13-40 | 6,000 | 1 | *344.342* | **344.362** |
| 150 \| *6* | 30-34 | 26 | 40 | 33 | Set 2 | 13-40 | 6,000 | 1 | available on demand | **344.363** |
| 150 \| *6* | 23-25 | 22 | 50 | 33 | Set 3 | 13-50 | 6,000 | 1 | *345.342* | **345.362** |
| 150 \| *6* | 30-34 | 29 | 50 | 33 | Set 3 | 13-50 | 6,000 | 1 | *345.343* | **345.363** |
| 178 \| *7* | 23-26 | 22 | 50 | 37 | Set 3 | 16-50 | 6,000 | 1 | **355.342** | **355.362** |
| 178 \| *7* | 32-35 | 29 | 50 | 37 | Set 3 | 16-50 | 6,000 | 1 | available on demand | **355.363** |
| 200 \| *8* | 24-27 | 22 | 50 | 48 | Set 3 | 16-50 | 6,000 | 1 | **365.342** | **365.362** |
| 200 \| *8* | 35-38 | 29 | 50 | 48 | Set 3 | 16-50 | 6,000 | 1 | *365.343* | **365.363** |
| 200 \| *8* | 28-32 | 25 | 80 | 38 | Set 4+1 | 16-80 | 4,500 | 1 | *366.342* | **366.362** |
| 200 \| *8* | 40-45 | 33 | 80 | 38 | Set 4+1 | 16-80 | 4,500 | 1 | *366.343* | **366.363** |
| 250 \| *10* | 30-35 | 25 | 80 | 50 | Set 4+1 | 20-80 | 3,600 | 1 | *376.342* | **376.362** |
| 250 \| *10* | 42-45 | 33 | 80 | 50 | Set 4+1 | 20-80 | 3,600 | 1 | *376.343* | **376.363** |
| 250 \| *10* | 32-37 | 26 | 100 | 50 | Set 4+1 | 20-100 | 3,600 | 1 | *377.342* | **377.362** |
| 250 \| *10* | 43-48 | 35 | 100 | 50 | Set 4+1 | 20-100 | 3,600 | 1 | *377.343* | **377.363** |
| 300 \| *12* | 35-40 | 26 | 100 | 60 | Set 4 | 30-100 | 3,000 | 1 | *387.342* | **387.362** |
| 300 \| *12* | 47-52 | 35 | 100 | 60 | Set 4 | 30-100 | 3,000 | 1 | *387.343* | *387.363* |
| 350 \| *14* | 35-40 | 26 | 100 | 85 | Set 5 | 32-100 | 2,400 | 1 | available on demand | *397.362* |

Bore must be indicated in the order. Standard bore delivery ex stock, short termed. Other bores are available with extra charge: 1 - 10 pcs. EUR 5.00 / 11 - 25 pcs. EUR 3.00

Plate with tube 80 and 100 (Set 4 / 5)

## Wheel Brushes, Brass Wire

| D mm \| *inch* | A | EB | R | H | d Stand. mm \| *inch* | d min./max. | RPM max. | Pack. | **MES 0.20** \| *0.008"* Art.-No. | **MES 0.30** \| *0.012"* Art.-No. |
|---|---|---|---|---|---|---|---|---|---|---|
| 80 \| *3 1/4* | 18-20 | 18 | 20 | 20 | 10 \| *3/8* | 10-20 | 10,000 | 1 | **312.542** | *312.562* |
| 80 \| *3 1/4* | 25-27 | 24 | 20 | 20 | 10 \| *3/8* | 10-20 | 10,000 | 1 | *312.543* | *312.563* |
| 100 \| *4* | 20-22 | 19 | 30 | 23 | Set 1 | 10-30 | 8,000 | 1 | **323.542** | *323.562* |
| 100 \| *4* | 28-30 | 25 | 30 | 23 | Set 1 | 10-30 | 8,000 | 1 | *323.543* | *323.563* |
| 125 \| *5* | 21-23 | 20 | 40 | 27 | Set 2 | 13-40 | 6,000 | 1 | **334.542** | *334.562* |
| 125 \| *5* | 29-31 | 26 | 40 | 27 | Set 2 | 13-40 | 6,000 | 1 | *334.543* | available on demand |
| 150 \| *6* | 22-24 | 20 | 40 | 33 | Set 2 | 13-40 | 6,000 | 1 | **344.542** | **344.562** |
| 150 \| *6* | 30-32 | 26 | 40 | 33 | Set 2 | 13-40 | 6,000 | 1 | *344.543* | **344.563** |
| 150 \| *6* | 23-25 | 22 | 50 | 33 | Set 3 | 13-50 | 6,000 | 1 | **345.542** | **345.562** |
| 150 \| *6* | 30-34 | 29 | 50 | 33 | Set 3 | 13-50 | 6,000 | 1 | *345.543* | **345.563** |
| 178 \| *7* | 23-26 | 22 | 50 | 37 | Set 3 | 16-50 | 6,000 | 1 | *355.542* | **355.562** |
| 178 \| *7* | 32-35 | 29 | 50 | 37 | Set 3 | 16-50 | 6,000 | 1 | *355.543* | **355.563** |
| 200 \| *8* | 24-27 | 22 | 50 | 48 | Set 3 | 16-50 | 6,000 | 1 | **365.542** | **365.562** |
| 200 \| *8* | 35-38 | 29 | 50 | 48 | Set 3 | 16-50 | 6,000 | 1 | *365.543* | **365.563** |
| 200 \| *8* | 28-32 | 25 | 80 | 38 | Set 4+1 | 16-80 | 4,500 | 1 | **366.542** | **366.562** |
| 200 \| *8* | 40-45 | 33 | 80 | 38 | Set 4+1 | 16-80 | 4,500 | 1 | *366.543* | *366.563* |
| 250 \| *10* | 30-35 | 25 | 80 | 50 | Set 4+1 | 20-80 | 3,600 | 1 | *376.542* | *376.562* |
| 250 \| *10* | 42-45 | 33 | 80 | 50 | Set 4+1 | 20-80 | 3,600 | 1 | available on demand | available on demand |
| 250 \| *10* | 32-37 | 26 | 100 | 50 | Set 4+1 | 20-100 | 3,600 | 1 | available on demand | **377.562** |
| 250 \| *10* | 43-48 | 35 | 100 | 50 | Set 4+1 | 20-100 | 3,600 | 1 | available on demand | available on demand |
| 300 \| *12* | 35-40 | 26 | 100 | 60 | Set 4 | 30-100 | 3,000 | 1 | available on demand | **387.562** |
| 300 \| *12* | 47-52 | 35 | 100 | 60 | Set 4 | 30-100 | 3,000 | 1 | available on demand | available on demand |
| 350 \| *14* | 35-40 | 26 | 100 | 85 | Set 5 | 32-100 | 2,400 | 1 | available on demand | *397.562* |

Bore must be indicated in the order. Standard bore delivery ex stock, short termed. Other bores are available with extra charge: 1 - 10 pcs. EUR 5.00 / 11 - 25 pcs. EUR 3.00

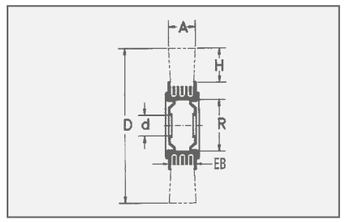


**Item Nos. in bold** are available ex stock.
Consider our minimum order value for *italic printed* article numbers (see page 139).

**ROF** = stainless steel wire, crimped

**MES** = brass wire, crimped

# Brushes for the wood machining industry

**Satin Brushes**
Satin brushes are the perfect tool for satining, polishing, abrading/smoothing, matting and structuring.

**Staple Set Wheel and Disc Brushes**
Wheel and Disc Brushes with abrasive nylon filament are used fort he wood machining industry. Used on angle grinders, the disc brushes are ideal for maintaining, cleaning, strucutring or polishing wood.
Besides the brushes are used for giving wood a rustic effect or for roughening it before treating with colour or lacquer.
The brushes are very effective when working on large surfaces.

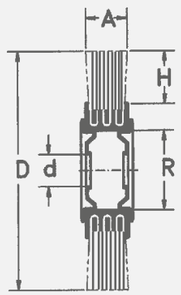

Satin Brushes

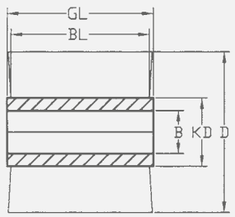

Wheel Brushes

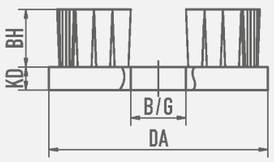

Disc Brushes

**Item Nos. in bold** are available ex stock.
Consider our minimum order value for *italic printed* article numbers (see page 139).

| | |
|---|---|
| **STM** | = brass coated steel, crimped |
| **STL** | = cord wire, crimped |
| **ROF** | = stainless steel wire, crimped |
| **SIC** | = silicon carbide bristles |
| **FIB** | = fibre |
| **PA** | = polyamide, crimped |

EAN

## Satin Brushes

| | D mm \| *inch* | A mm \| *inch* | H | d mm \| *inch* | RPM max. | Pack. | **ROF 0.20** \| *0.008"* Art.-No. | **SIC 80/1.2** Art.-No. | **STL 0.25** \| *0.010"* Art.-No. | **FIB/PA 0.4** \| *0.016"* Art.-No. |
|---|---|---|---|---|---|---|---|---|---|---|
| 1 | 100 \| *4* | 12 \| 1/2 | 21 | 19.2 \| *3/4* | 8,000 | 5 | *320.341.19* | *320.821.19* | *320.703.19* | |
| 2 | 100 \| *4* | 70 \| *2 3/4* | 23 | 19.2 \| *3/4* | 8,000 | 1 | **323.348.19** | **323.828.19** | **323.704.19** | |
| | 100 \| *4* | 100 \| *4* | 23 | 19.2 \| *3/4* | 8,000 | 1 | *323.305.19* | *323.805.19* | *323.705.19* | **323.900.10** |

| | D mm \| *inch* | A mm \| *inch* | H | d mm \| *inch* | RPM max. | Pack. | **STM 0.35** \| *0.014"* Art.-No. | **SIC K 60/1.5** Art.-No. | **SIC 80/1.2** Art.-No. | **SIC K 120/1.1** Art.-No. |
|---|---|---|---|---|---|---|---|---|---|---|
| 2 | 100 \| *4* | 120 \| *4 3/4* | 23 | 12.7 \| *1/2* | 8,000 | 1 | *323.770.13* | *323.810.13* | *323.820.13* | *323.830.13* |

Bore must be indicated in the order. Standard bore delivery ex stock, short termed. Other bores are available with extra charge: 1 - 10 pcs. EUR 5.00 / 11 - 25 pcs. EUR 3.00

## 3 Staple Set Wheel Brushes

| D mm \| *inch* | GL | BL | B | KD | RPM max. | Pack. | **SIC 46/1.6** Art.-No. | **SIC 60/1.5** Art.-No. | **SIC 80/1.2** Art.-No. | **SIC 120/1.10** Art.-No. |
|---|---|---|---|---|---|---|---|---|---|---|
| 140 \| *5 1/2* | 58 | 40 | M 14 | 80 | 2,500 | 1 | *402.881* | *402.882* | **402.880** | *402.883* |
| 140 \| *5 1/2* | 90 | 75 | M 14 | 80 | 2,500 | 1 | *402.891* | *402.892* | **402.890** | *402.893* |

## 4 Staple Set Disc Brushes

| Filling | DA mm \| *inch* | KD mm \| *inch* | BH | B/G | RPM max. | Pack. | Art.-No. |
|---|---|---|---|---|---|---|---|
| **SIC** 46/1.6 | 130 \| *5 1/8* | 20 \| *3/4* | 50 \| *2* | M 14 x 2.0 | 2,500 | 1 | *405.843* |
| **SIC** 60/1.5 | 130 \| *5 1/8* | 20 \| *3/4* | 50 \| *2* | M 14 x 2.0 | 2,500 | 1 | *405.844* |
| **SIC** 80/1.2 | 130 \| *5 1/8* | 20 \| *3/4* | 50 \| *2* | M 14 x 2.0 | 2,500 | 1 | **405.845** |

# Special Models

**Band Saw Brushes**
Wheel Brushes in circular saws or band saws are used for cleaning the chipping space. A wheel brush with diameter 80-100 mm is pressed against the saw blade (circular or band saw). By moving the saw blade or band the brush is rolling and it taking the chipping out of the shipping space. Hence a built-up edge is prevented and the durability of the saw blade extended. The used wheel brushes usually are with steel wire, corded wire or nylon filament. The brushes are suitable for all common machines.

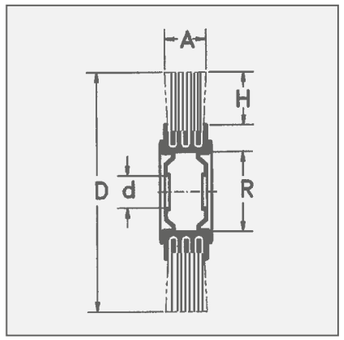


**Stripping Brushes**
For the removal of laquer and other insulations from cables and electric equipment. The polished surface and the concentric running enable soft removal of laquer from the wires.

**Small diameter crimped wheels SDW**
Lessmann small diameter crimped wheels have a manifold use, e.g. for deburring, cleaning, derusting or paint stripping on various work pieces and surfaces. A typical application e.g. is the cleaning of interior and exterior threads or the treatment of areas which are hard to reach.
The brushes are inserted directly into the machine or are mounted into a drilling machine or fast-moving item with a suitable drive arbor. Depending on the application and requirements several brushes can be mounted in a row. Suitable adapters are available on request.
The typical filling material Lessmann offers is steel wire, stainless steel wire or abrasive nylon. On request other wire diameters and filling materials are available. All brushes are manufactured with a copper shell.

**Wheel Brushes for the treatment of hard metal**
Wheel brushes with diamond filling are often used for the rounding of edges of carbide or diamond tools.
Cutting edges on carbide tools extend the lifetime and allow a higher cutting speed. The treatment on major cutting edges of drills are mainly operated manually. Lessmann wheel brushes with diamond support to decrease abrasion and to improve the surface quality of the work piece. Due to the consistent and narrow filling a clean and steady dipping of the edges is possible.
Surfaces of chip flutes of carbide drills are finished with brushes with aluminum oxide filling material. Finished chip flutes have a better process stability when drilling.

**Stainless Steel Brushes**
Information on working on stainless steel you find at www.lessmann.com

**Item Nos. in bold** are available ex stock.
Consider our minimum order value for *italic printed* article numbers (see page 139).

| | |
|---|---|
| STA | = steel wire, crimped |
| STM | = brass coated steel, crimped |
| STL | = cord wire, crimped |
| ROF | = stainless steel wire, crimped |
| PA | = polyamide, crimped |
| SIC | = silicon carbide bristles |
| AO | = aluminium oxide bristles |

**Band Saw Brushes**

| | Filling | D mm \| *inch* | A | H | d | RPM max. | Pack. | Art.-No. |
|---|---|---|---|---|---|---|---|---|
| 1 | **PA** 0.50 | 85 \| *3 1/4* | 10 | 14 | 12 | 8,000 | 10 | *300.091* |
| | **PA** 0.50 | 100 \| *4* | 13 | 21 | 12 | 8,000 | 10 | **320.001** |
| | **PA** 0.50 | 100 \| *4* | 13 | 21 | 13 | 8,000 | 10 | **320.004** |
| | **PA** 0.80 | 100 \| *4* | 20-22 | 23 | 12 | 8,000 | 25 | *323.002* |
| | **PA** 0.80 | 100 \| *4* | 13 | 21 | 12 | 8,000 | 10 | *320.003* |
| | **PA** 1.0 | 125 \| *5* | 13 | 33 | 13 | 8,000 | 5 | **330.001** |

| | Filling | D mm \| *inch* | A | H | d | RPM max. | Pack. | Art.-No. |
|---|---|---|---|---|---|---|---|---|
| 2 | **STA** 0.20 | 80 \| *3 1/4* | 12 | 20 | 10 | 15,000 | 10 | *312.141* |
| | **STA** 0.30 | 100 \| *4* | 13 | 21 | 12.7 | 4,500 | 10 | **320.161.12** |
| | **STM** 0.20 | 60 \| *2 3/8* | 10-12 | 19 | 6 | 15,000 | 10 | *300.742* |
| | **STM** 0.20 | 80 \| *3 1/4* | 15 | 27 | 6.8 | 15,000 | 10 | *311.742.01* |
| | **STM** 0.30 | 80 \| *3 1/4* | 15 | 27 | 8 | 15,000 | 10 | **311.762** |
| | **STL** 4 x 0.25 | 80 \| *3 1/4* | 18-20 | 27 | 6 | 15,000 | 10 | **310.702.06** |

**3 Stripping Brushes**

| D mm \| *inch* | A mm \| *inch* | d mm \| *inch* | Pack. | **STA 0.10** \| *0.004"* Art.-No. | **STA 0.15** \| *0.006"* Art.-No. | **STA 0.20** \| *0.008"* Art.-No. | **STA 0.25** \| *0.010"* Art.-No. | **STA 0.30** \| *0.012"* Art.-No. |
|---|---|---|---|---|---|---|---|---|
| 30 \| *1 1/4* | 20 \| *3/4* | 6 \| *1/4* | 10 | *301.213.10* | *301.213.15* | *301.213.20* | | *301.213.30* |
| 35 \| *1 1/2* | 20 \| *3/4* | 6 \| *1/4* | 10 | | *301.214.15* | **301.214.20** | available on demand | *301.214.30* |
| 40 \| *1 3/8* | 25 \| *1* | 10 \| *3/8* | 10 | | *301.225.15* | **301.225.20** | *301.225.25* | *301.225.30* |
| 80 \| *3* | 30 \| *1 1/4* | 16 \| *5/8* | 10 | | | *301.236.20* | available on demand | *301.236.30* |

**4 Small Diameter crimped Wheels SDW**

| D mm \| *inch* | A mm \| *inch* | d mm \| *inch* | H mm \| *inch* | RPM max. | Pack. | **STA 0.15** \| *0.006"* Art.-No. | **STA 0.20** \| *0.008"* Art.-No. | **STA 0.35** \| *0.014"* Art.-No. | **ROF 0.15** \| *0.006"* Art.-No. |
|---|---|---|---|---|---|---|---|---|---|
| 50 \| *2* | 10 \| *3/8* | 13 \| *1/2* | 16 \| *5/8* | 15,000 | 10 | **35E.136** | **35E.146** | | **35E.336** |
| 63 \| *2 1/2* | 10 \| *3/8* | 13 \| *1/2* | 21 \| *53/64* | 15,000 | 10 | | **36E.146** | **36E.176** | |
| 75 \| *3* | 12 \| *1/2* | 13 \| *1/2* | 29 \| *1 1/8* | 15,000 | 10 | | | | **37E.336** |
| 75 \| *3* | 12 \| *1/2* | 16 \| *5/8* | 22 \| *7/8* | 15,000 | 10 | **37E.137** | **37E.147** | | |

| D mm \| *inch* | A mm \| *inch* | d mm \| *inch* | H mm \| *inch* | RPM max. | Pack. | **SIC K120/0.6** Art.-No. | **SIC K180/0.9** Art.-No. | **SIC K320/0.6** Art.-No. |
|---|---|---|---|---|---|---|---|---|
| 50 \| *2* | 10 \| *3/8* | 16 \| *5/8* | 12 \| 1/2 | 15,000 | 10 | **35E.847** | **35E.857** | **35E.877** |
| 63 \| *2 1/2* | 10 \| *3/8* | 16 \| *5/8* | 18 \| *5/8* | 15,000 | 10 | **36E.847** | | **36E.877** |

**5 Wheel Brushes for the treatment of hard metal**

| D mm \| *inch* | A mm \| *inch* | d mm \| *inch* | H mm \| *inch* | RPM max. | Pack. | **Diamant K400** Art.-No. | **AO 600** Art.-No. |
|---|---|---|---|---|---|---|---|
| 100 \| *4* | 12 \| *1/2* | 16 \| *5/8* | 27 \| *1* | 3.000 | 1 | | *320.061** |
| 150 \| *6* | 5 \| *13/64* | 20 \| *3/4* | 23 \| *59/64* | 3.000 | 1 | *408.819.DB* | |
| 150 \| *6* | 10 \| *3/8* | 20 \| *3/4* | 23 \| *59/64* | 3.000 | 1 | *408.829.DB* | |
| 150 \| *6* | 15 \| *5/8* | 20 \| *3/4* | 23 \| *59/64* | 3.000 | 1 | *408.839.DB* | *345.051** |

* Filling with angular cut

# Accessories

**Adapters**
With these adapters the bore can be reduced to the required size.
The wheel brushes are supplied with adapter sets which makes it possible to mount the brushes on all popular grinding machines.
The adapters have the following dimensions:

**Set 1** / tube 30
30 / 1" / 22,2 / 20 / 16 / 1/2" / 12
**Set 2** / tube 40:
40 / 32 / 1" / 22,2 / 20 / 16 / 1/2"
**Set 3** / tube 50:
50 / 32 / 1" / 22,2 / 20 / 16 / 1/2"
**Set 4** / tube 80 + 100:
brushes with metal discs, bore 50.8 and double keyway 7x13; plus adapter to bore 30. Further reduction possible with set 1.
**Set 5** / tube 80 + 100:
brushes with metal discs, bore 50.8 and double keyway 7x13; plus adapter to bore 32. Further reduction possible with set 1.

A technical advice and safety information leaflet is included.

The practical adapter sets can also be ordered separately.

Single plastic reducing rings in many different dimensions can be supplied ex stock.

**Drive Arbors**
For use on drilling machines.

**Metal Discs**
Brushes with tube diameter 80 and 100 mm are supplied with our standard metal plates made of steel. Occasionally these metal plates are also required for brushes with smaller tubes. The metal plates on this page are therefore also suitable for the brushes on page 29 - 31. Please indicate the required bore size on your order and note that normally two metal plates are required for one brush.

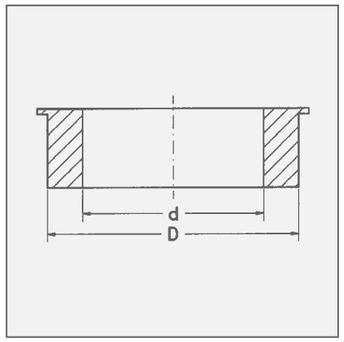


**Item Nos. in bold** are available ex stock.
Consider our minimum order value for *italic printed* article numbers (see page 139).

## Adapter Sets

| | | | D | d | Pack. | Art.-No. |
|---|---|---|---|---|---|---|
| 1 | Set 1 | Tube 30 | 30 | 1" - 22.2 - 20 - 16 - 1/2" - 12 | 2 | **000.886.63** |
| 2 | Set 2 | Tube 40 | 40 | 32 - 1" - 22.2 - 20 - 16 - 1/2" | 2 | **000.886.64** |
| 3 | Set 3 | Tube 50 | 50 | 32 - 1" - 22.2 - 20 - 16 - 1/2" | 2 | **000.886.65** |
| 4 | Set 4 | Tube 80/100 | 50.8 | 30 (further adapters with Set 1) | 2 | **000.886.68** |
| | Set 5 | Tube 80/100 | 50.8 | 32 | 2 | **000.888.32** |
| 5 | Single plastic reducing rings in many different dimensions can be supplied ex stock. | | | | | |

EAN

## Drive Arbors

| D mm \| *inch* | L mm \| *inch* | Thread | Pack. | 6 Art.-No. |
|---|---|---|---|---|
| 6 \| *1/4* | 60 \| *2 3/8* | M 10 x 1.5 | 1 | **000.041** |
| 10 \| *3/8* | 60 \| *2 3/8* | M 10 x 1.5 | 1 | **000.042** |
| 10 \| *3/8* | 75 \| *3* | M 14 x 2.0 | 1 | **000.043** |

| D mm \| *inch* | L mm \| *inch* | Thread | Pack. | 7 Art.-No. |
|---|---|---|---|---|
| 6 \| *1/4* | 40 \| *1 3/8* | M 10 left | 1 | **000.044** |
| 6 \| *1/4* | 50 \| *2* | M 12 left | 1 | **000.045** |

## 8 Metal Discs as Spare Part

| | Pack. | Art.-No. | | Pack. | Art.-No. | | Pack. | Art.-No. | | Pack. | Art.-No. | | Pack. | Art.-No. |
|---|---|---|---|---|---|---|---|---|---|---|---|---|---|---|
| R 30 | 2 | *000.631* | R 40 | 2 | *000.641* | R 50 | 2 | *000.651* | R 80 | 2 | *000.661* | R100* | 2 | *000.671* |

Bore must be indicated!
* On request with double keyset 12 x 7 (50.8 / 52.9 / 54.5)

EAN

## 9 Thread Adapter

| from | to | L mm \| *inch* | Pack. | Art.-No. |
|---|---|---|---|---|
| Internal W 1/2 | Internal M 12 | 40 \| *1 3/8* | 1 | **001.211** |
| Internal W 1/2 | Internal M 10 | 40 \| *1 3/8* | 1 | **001.212** |
| Internal W 3/8 | Internal M 10 | 40 \| *1 3/8* | 1 | **001.215** |
| External M 10 | Internal W 1/2 | 40 \| *1 3/8* | 1 | **001.222** |
| External M 10 | Internal W 3/8 | 40 \| *1 3/8* | 1 | **001.225** |

LESSMANN®
THE GERMAN BRUSH COMPANY

# DEBURRING BRUSHES

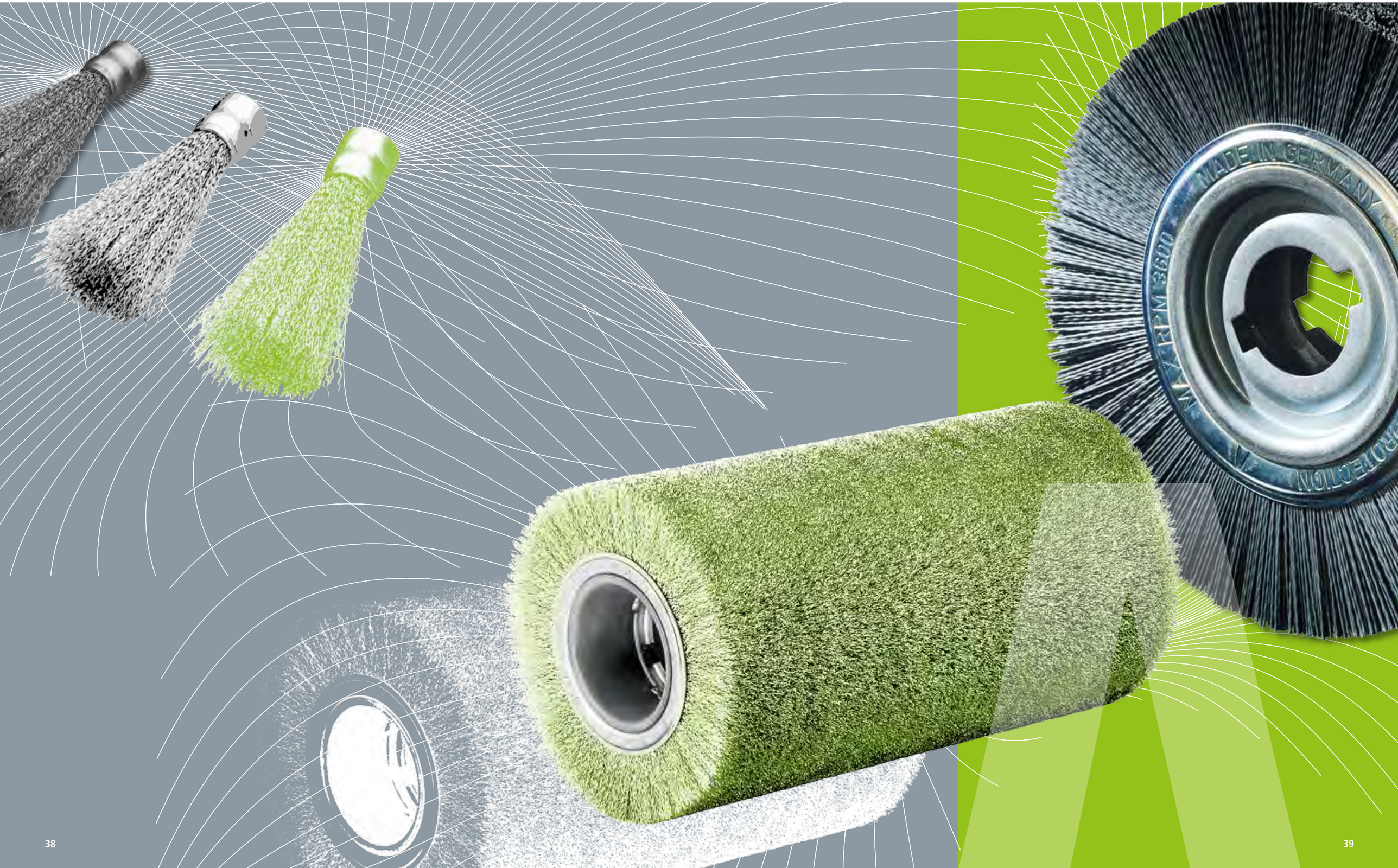

# Deburring Brushes

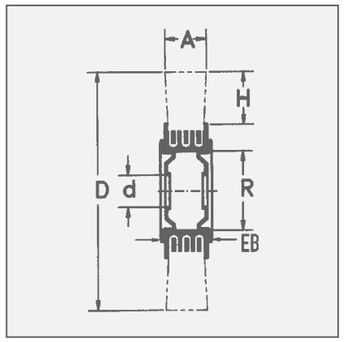


**Deburring Brushes**
Specially developed wheel brushes for deburring. These are suitable for all common deburring machines. Although they are heavier than other brushes because of their dense filling, we exclude any inbalance by evenly arranged filling material and the testing of every brush. Filled with high-quality wire, these brushes have a longer service life.

All brushes are with double keyway. Please indicate the required bore.

On the following pages you will find the standard measurements. Special measurements are available on request.

**Deburring Brushes with Cord Wire STL / ROL**
Deburring Brushes with cord wire are usually used for working on very hard materials. This wire construction gives the wires additional hold, hence the output of the brush is increased.

**Encapsulated Deburring Brushes**
Are ideal for an aggressive and very exact working. An early beak of the wires can be prevented. Therefore the brush has a longer life time and a better durability.

**Stainless Steel Brushes**
LESSMANN brushes with stainless steel wire have green site plates.
More information for brush applications on stainless materials you will find at www.lessmann.com

For more information about deburring please ask for our leaflet "Deburring with brushes".

**Item Nos. in bold** are available ex stock.
Consider our minimum order value for *italic printed* article numbers (see page 139).

**STH** = steel wire, high tensile, crimped
**STM** = brass coated steel, crimped
**STL** = cord wire, crimped

1 2

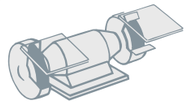

DEBURRING BRUSHES

EAN **1 Deburring Brushes, Steel Wire**

| D mm \| *inch* | A mm \| *inch* | EB | R mm \| *inch* | H mm \| *inch* | d Stand. | RPM max. | Pack. | **STH 0.20** \| *0.008"* Art.-No. | **STH 0.35** \| *0.014"* Art.-No. | **STH 0.50** \| *0.020"* Art.-No. |
|---|---|---|---|---|---|---|---|---|---|---|
| 250 \| *10* | 60 \| *2 3/8* | 58 | 100 \| *4* | 50 \| *2* | 50.8 | 3,600 | 1 | **377.051** | **377.053** | **377.054** |
| 250 \| *10* | 60 \| *2 3/8* | 55 | 100 \| *4* | 50 \| *2* | 100 | 3,600 | 1 | *377.051.00* | *377.053.00* | *377.054.00* |
| 250 \| *10* | 60 \| *2 3/8* | 53 | 100 \| *4* | 50 \| *2* | 50.8 | 3,600 | 1 | *377.051.T1* | *377.053.T1* | *377.054.T1* |
| 250 \| *10* | 60 \| *2 3/8* | 50 | 100 \| *4* | 50 \| *2* | 100 | 3,600 | 1 | *377.051.TA* | **377.053.TA** | *377.054.TA* |
| 250 \| *10* | 80 \| *3 1/4* | 79 | 100 \| *4* | 50 \| *2* | 50.8 | 3,600 | 1 | *377.052* | *377.095* | *377.077* |
| 250 \| *10* | 100 \| *4* | 99 | 100 \| *4* | 50 \| *2* | 50.8 | 3,600 | 1 | *377.059* | *377.066* | *377.096* |
| 300 \| *12* | 60 \| *2 3/8* | 49 | 100 \| *4* | 60 \| *2 3/8* | 50.8 | 3,000 | 1 | *387.051* | *387.053* | *387.054* |
| 300 \| *12* | 100 \| *4* | 93 | 100 \| *4* | 60 \| *2 3/8* | 50.8 | 3,000 | 1 | available on demand | *387.055* | available on demand |

EAN **2 Deburring Brushes, Cord Wire, Brass Coated Steel Wire**

| D mm \| *inch* | A mm \| *inch* | EB | R mm \| *inch* | H mm \| *inch* | d Stand. | RPM max. | Pack. | **STL 0.38** \| *0.015"* Art.-No. | **STM 0.38** \| *0.015"* Art.-No. |
|---|---|---|---|---|---|---|---|---|---|
| 250 \| *10* | 60 \| *2 3/8* | 58 | 100 \| *4* | 50 \| *2* | 50.8 | 3,600 | 1 | **377.043** | *377.063* |
| 250 \| *10* | 60 \| *2 3/8* | 55 | 100 \| *4* | 50 \| *2* | 100 | 3,600 | 1 | *377.043.00* | *377.063.00* |
| 250 \| *10* | 60 \| *2 3/8* | 53 | 100 \| *4* | 50 \| *2* | 50.8 | 3,600 | 1 | *377.043.T1* | *377.063.T1* |
| 250 \| *10* | 60 \| *2 3/8* | 50 | 100 \| *4* | 50 \| *2* | 100 | 3,600 | 1 | *377.043.TA* | *377.063.TA* |
| 250 \| *10* | 80 \| *3 1/4* | 79 | 100 \| *4* | 50 \| *2* | 50.8 | 3,600 | 1 | *377.045* | available on demand |
| 250 \| *10* | 100 \| *4* | 99 | 100 \| *4* | 50 \| *2* | 50.8 | 3,600 | 1 | *377.048* | available on demand |

All brushes with metal disc and bore 50.8 mm and double keyway 13 x 7 mm!
Further standard bores: 52.9 / 54.5 mm; d min/max: 30 mm ≤ d ≤ R; Deburring Brushes also available with tube 120.

# Deburring Brushes

1 2 3 4

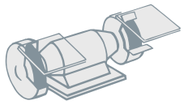

## Deburring Brushes, Stainless Steel Wire

| D mm \| *inch* | A mm \| *inch* | EB | R | H | d Stand. | RPM max. | Pack. | 1 ROH 0.20 \| *0.008"* Art.-No. | 1 ROH 0.35 \| *0.014"* Art.-No. | 1 ROH 0.50 \| *0.020"* Art.-No. | 2 ROL 0.35 \| *0.014"* Art.-No. |
|---|---|---|---|---|---|---|---|---|---|---|---|
| 250 \| *10* | 60 \| *2 3/8* | 58 | 100 | 50 | 50.8 | 3,600 | 1 | *377.044* | **377.089** | *377.094* | **377.707** |
| 250 \| *10* | 60 \| *2 3/8* | 55 | 100 | 50 | 100 | 3,600 | 1 | *377.044.00* | *377.089.00* | *377.094.00* | *377.707.00* |
| 250 \| *10* | 60 \| *2 3/8* | 53 | 100 | 50 | 50.8 | 3,600 | 1 | *377.044.T1* | *377.089.T1* | *377.094.T1* | *377.707.T1* |
| 250 \| *10* | 60 \| *2 3/8* | 50 | 100 | 50 | 100 | 3,600 | 1 | *377.044.TA* | *377.089.TA* | *377.094.TA* | *377.707.TA* |
| 250 \| *10* | 80 \| *3 1/4* | 79 | 100 | 50 | 50.8 | 3,600 | 1 | *377.047* | *377.090* | *377.097* | available on demand |
| 250 \| *10* | 100 \| *4* | 99 | 100 | 50 | 50.8 | 3,600 | 1 | *377.049* | *377.093* | *377.099* | available on demand |
| 300 \| *12* | 100 \| *4* | 95 | 100 | 60 | 50.8 | 3,000 | 1 | available on demand | available on demand | available on demand | available on demand |

All brushes with metal disc and bore 50.8 mm and double keyway 13 x 7 mm!
Further standard bores: 52.9 / 54.5 mm; d min/max: 30 mm ≤ d ≤ R; Deburring Brushes also available with tube 120.

## Deburring Brushes, encapsulated

| D mm \| *inch* | A mm \| *inch* | R | H | d Stand. | Pack. | 3 STH 0.20 \| *0.008"* Art.-No. | 3 STH 0.35 \| *0.014"* Art.-No. | 4 ROH 0.20 \| *0.008"* Art.-No. | 4 ROH 0.35 \| *0.014"* Art.-No. |
|---|---|---|---|---|---|---|---|---|---|
| 250 \| *10* | 13 \| *1/2* | 100 | 58 | 33 | 1 | *370.241.KG* | **370.271.KG** | **370.441.KG** | **370.471.KG** |
| 250 \| *10* | 20 \| *3/4* | 100 | 57 | 33 | 1 | *370.242.KG* | *370.272. KG* | **370.442.KG** | **370.472.KG** |

2 1

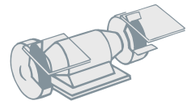

## 1 Deburring Brushes, Silicon Carbide Bristles

| D mm \| *inch* | A mm \| *inch* | EB | R mm \| *inch* | H mm \| *inch* | d Stand. | RPM max. | Pack. | SIC 80/1.2 Art.-No. | SIC 120/1.1 Art.-No. | SIC 180/1.0 Art.-No. | SIC 320/0.56 Art.-No. |
|---|---|---|---|---|---|---|---|---|---|---|---|
| 250 \| *10* | 60 \| *2 3/8* | 58 | 100 \| *4* | 50 \| *2* | 50.8 | 3,600 | 1 | *377.824* | **377.835** | **377.854** | *377.875* |
| 250 \| *10* | 60 \| *2 3/8* | 55 | 100 \| *4* | 50 \| *2* | 100 | 3,600 | 1 | *377.824.00* | *377.835.00* | *377.854.00* | *377.875.00* |
| 250 \| *10* | 60 \| *2 3/8* | 53 | 100 \| *4* | 50 \| *2* | 50.8 | 3,600 | 1 | *377.824.T1* | *377.835.T1* | *377.854.T1* | *377.875.T1* |
| 250 \| *10* | 60 \| *2 3/8* | 50 | 100 \| *4* | 50 \| *2* | 100 | 3,600 | 1 | *377.824.TA* | *377.835.TA* | *377.854.TA* | *377.875.TA* |
| 250 \| *10* | 80 \| *3 1/4* | 79 | 100 \| *4* | 50 \| *2* | 50.8 | 3,600 | 1 | available on demand | *377.837* | available on demand | available on demand |
| 250 \| *10* | 100 \| *4* | 99 | 100 \| *4* | 50 \| *2* | 50.8 | 3,600 | 1 | available on demand | *377.839* | available on demand | available on demand |
| 300 \| *12* | 60 \| *2 3/8* | 55 | 100 \| *4* | 60 \| *2 3/8* | 50.8 | 3,000 | 1 | *387.824* | available on demand | available on demand | available on demand |
| 300 \| *12* | 100 \| *4* | 95 | 100 \| *4* | 60 \| *2 3/8* | 50.8 | 3,000 | 1 | available on demand | available on demand | available on demand | available on demand |

## 2 Deburring Brushes, mixed filament

| D mm \| *inch* | A mm \| *inch* | EB | R mm \| *inch* | H mm \| *inch* | d Stand. | RPM max. | Pack. | ROF 0.20 - SIC 120 Mixed filament with mixing proportion 1:1 Art.-No. |
|---|---|---|---|---|---|---|---|---|
| 250 \| *10* | 60 \| *2 3/8* | 58 | 100 \| *4* | 50 \| *2* | 50.8 | 3,600 | 1 | *377.091* |
| 250 \| *10* | 60 \| *2 3/8* | 55 | 100 \| *4* | 50 \| *2* | 100 | 3,600 | 1 | *377.091.00* |

All brushes with metal disc and bore 50.8 mm and double keyway 13 x 7 mm!
Further standard bores: 52.9 / 54.5 mm; d min/max: 30 mm ≤ d ≤ R; Deburring Brushes also available with tube 120.

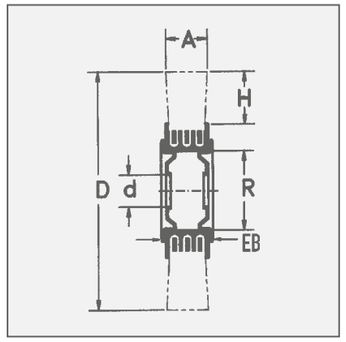


**Item Nos. in bold** are available ex stock.
Consider our minimum order value for *italic printed* article numbers (see page 139).

**STH** = steel wire, high tensile, crimped
**ROL** = stainless steel, cord wire
**ROF** = stainless steel wire, crimped
**SIC** = silicon carbide bristles

# Roller Brushes

**Roller Brushes**
Roller Brushes for the use in deburring machines. For Deburring e.g. cutting edges of tubes.
As filling material you can choose from steel and stainless steel wire, brass coated steel wire or cord wire. These brushes feature with their dense filling.

**Roller Brushes**
**Deburring brushes are available with**
**D = 250 - 400 mm and**
**A = 55 - 700 mm**

**In your inquiry please indicate measure D, A and the bore e. g. 50.8 mm, 52.9 mm or 54.5 mm with double keyway 13 x 7 mm. Other bores up to 120 mm are available on demand.**

Moreover we offer with our welded metal plate special collets for the roller brushes. Bores and keyways will be produced customized.

**Note:** Due to our advanced manufacturing technology it is possible to produce balanced roller brushes without balancing weights. Hence the brush has a steady run throughout its whole lifetime.

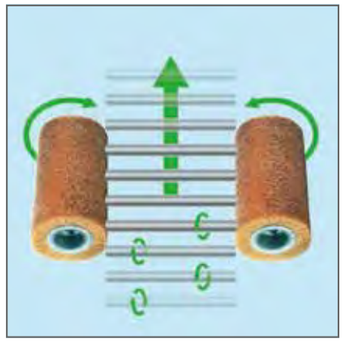

Function chart of a deburring machine with roller brushes

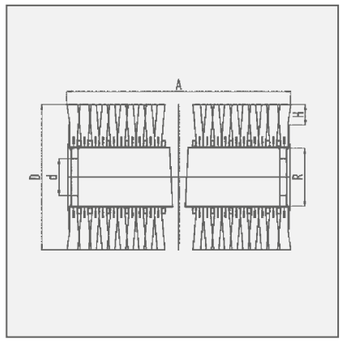


**Item Nos. in bold** are available ex stock.
Consider our minimum order value for *italic printed* article numbers (see page 139).

**STH** = steel wire, high tensile, straight
**STL** = cord wire, crimped
**ROH** = stainless steel wire, high tensile, crimped
**SIC** = silicon carbide bristles

Strip brushes for deburring machines you find on pages 136 - 137.

**Roller Brushes, Steel Wire**

| D mm \| *inch* | A mm \| *inch* | R mm \| *inch* | H mm \| *inch* | d Stand. | RPM max. | Pack. | **STH 0.20** \| *0.008"* Art.-No. | **STH 0.35** \| *0.014"* Art.-No. | **STH 0.50** \| *0.020"* Art.-No. | **STL 0.38** \| *0.015"* Art.-No. |
|---|---|---|---|---|---|---|---|---|---|---|
| 250 \| *10* | 300 \| *12* | 100 \| *4* | 50 \| *2* | 100 | 3,600 | 1 | *377.240.30* | *377.270.30* | *377.290.30* | *377.780.30* |
| 250 \| *10* | 460 \| *18* | 100 \| *4* | 50 \| *2* | 100 | 3,600 | 1 | *377.240.46* | *377.270.46* | *377.290.46* | *377.780.46* |
| 250 \| *10* | 600 \| *24* | 100 \| *4* | 50 \| *2* | 100 | 3,600 | 1 | *377.240.60* | *377.270.60* | *377.290.60* | *377.780.60* |
| 300 \| *12* | 460 \| *18* | 100 \| *4* | 60 \| *2 3/8* | 100 | 3,000 | 1 | *387.240.46* | *387.270.46* | *387.290.46* | *387.780.46* |
| 300 \| *12* | 460 \| *18* | 120 \| *4 3/4* | 50 \| *2* | 120 | 3,000 | 1 | *388.240.46* | *388.270.46* | *388.290.46* | *388.780.46* |
| 300 \| *12* | 600 \| *24* | 120 \| *4 3/4* | 50 \| *2* | 120 | 3,000 | 1 | *388.240.60* | *388.270.60* | *388.290.60* | *388.780.60* |

**Roller Brushes, Stainless Steel, Abrasive Bristles**

| D mm \| *inch* | A mm \| *inch* | R mm \| *inch* | H mm \| *inch* | d Stand. | RPM max. | Pack. | **ROH 0.20** \| *0.008"* Art.-No. | **ROH 0.35** \| *0.014"* Art.-No. | **ROH 0.50** \| *0.020"* Art.-No. | **SIC 120 / 1.1** Art.-No. |
|---|---|---|---|---|---|---|---|---|---|---|
| 250 \| *10* | 300 \| *12* | 100 \| *4* | 50 \| *2* | 100 | 3,600 | 1 | *377.440.30* | *377.470.30* | *377.490.30* | *377.830.30* |
| 250 \| *10* | 460 \| *18* | 100 \| *4* | 50 \| *2* | 100 | 3,600 | 1 | *377.440.46* | *377.470.46* | *377.490.46* | *377.830.46* |
| 250 \| *10* | 600 \| *24* | 100 \| *4* | 50 \| *2* | 100 | 3,600 | 1 | *377.440.60* | *377.470.60* | *377.490.60* | *377.830.60* |
| 300 \| *12* | 460 \| *18* | 100 \| *4* | 60 \| *2 3/8* | 100 | 3,000 | 1 | *387.440.46* | *387.470.46* | *387.490.46* | *387.830.46* |
| 300 \| *12* | 460 \| *18* | 120 \| *4 3/4* | 50 \| *2* | 120 | 3,000 | 1 | *388.440.46* | *388.470.46* | *388.490.46* | *388.830.46* |
| 300 \| *12* | 600 \| *24* | 120 \| *4 3/4* | 50 \| *2* | 120 | 3,000 | 1 | *388.440.60* | *388.470.60* | *388.490.60* | *388.830.60* |

Other measurements and filling materials as well as collets in special measurements are available on request.

# Deburring End Brushes

**Deburring End Brushes**
These brushes are perfect for deburring tubes, profiles or even plane surfaces. Deburring end brushes are used in a set of 8, 16 or 24 single end brushes integrated in one deburring device.

The metal bush fits all standard collets.

**Stainless Steel**
Information on working on stainless steel material you find at. www.lessmann.com

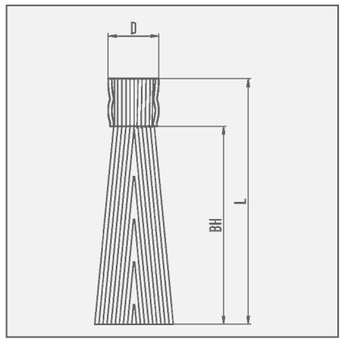


**Item Nos. in bold** are available ex stock.
Consider our minimum order value for *italic printed* article numbers (see page 139).

**STH** = steel wire, high tensile, straight
**STL** = cord wire, crimped
**ROH** = stainless steel wire, high tensile, crimped
**SIC** = silicon carbide bristles

## 1 Deburring End Brushes, Steel Wire

| D mm \| *inch* | L mm \| *inch* | BH mm \| *inch* | Pack. | **STH 0.20** \| *0.008"* Art.-No. | **STH 0.35** \| *0.014"* Art.-No. | **STH 0.50** \| *0.020"* Art.-No. |
|---|---|---|---|---|---|---|
| 25 \| *1* | 120 \| *4 3/4* | 95 \| *3 1/2* | 16 | **048.241** | **048.271** | **048.291** |

## 2 Deburring End Brushes, CordWire

| D mm \| *inch* | L mm \| *inch* | BH mm \| *inch* | Pack. | **STL 0.35** \| *0.014"* Art.-No. | **STL 0.38** \| *0.015"* Art.-No. |
|---|---|---|---|---|---|
| 25 \| *1* | 120 \| *4 3/4* | 95 \| *3 1/2* | 16 | **048.701** | *048.081* |

## 3 Deburring End Brushes, Stainless Steel Wire

| D mm \| *inch* | L mm \| *inch* | BH mm \| *inch* | Pack. | **ROH 0.20** \| *0.008"* Art.-No. | **ROH 0.35** \| *0.014"* Art.-No. | **ROH 0.50** \| *0.020"* Art.-No. |
|---|---|---|---|---|---|---|
| 25 \| *1* | 120 \| *4 3/4* | 95 \| *3 1/2* | 16 | **048.441** | **048.471** | **048.491** |

## Deburring End Brushes, Silicon Carbide Bristles, mixed wire

| | | | | 4 | | | 5 |
|---|---|---|---|---|---|---|---|
| D mm \| *inch* | L mm \| *inch* | BH mm \| *inch* | Pack. | **SIC 80 / 1.2** Art.-No. | **SIC 120 / 1.1** Art.-No. | **SIC 180 / 1.0** Art.-No. | **SIC 120 / 1.1 - ROH 0.20** Art.-No. |
| 25 \| *1* | 120 \| *4 3/4* | 95 \| *3 1/2* | 16 | **048.821** | **048.841** | **048.851** | **048.901*** |
| 25 \| *1* | 120 \| *4 3/4* | 95 \| *3 1/2* | 16 | | | | **048.941**** |

* Mixing proportion 1:1 | ** Mixing proportion 2:1

## Brush Adapter for deburring end brushes

| Suitable for all common deburring machines | Art.-No |
|---|---|
| Device for 12 End Brushes | available on demand |
| Device for 16 End Brushes | *048.999* |
| Device for 24 End Brushes | *048.998* |

LESSMANN®
THE GERMAN BRUSH COMPANY

# CUP AND BEVEL BRUSHES

# Cup Brushes

**Cup Brushes**
Knot cup brushes are for heavy duty use: for the preparing of metal surfaces before painting, the removal of slag, rust, scale or concrete waste.
The brushes diameter 80/100/125 mm (Art. No. 484/486/487) have a **bridle** fitted for stability. The bridle can be removed after wear of the wire exposing a further 20 mm of useable wire!

We recommend the use of our brush with diameter 90 mm for small angle grinders. Compared to the common brush with diameter 65 mm this model has 50% more wire and it is really something special in the brush market!

**Knot Cup Brushes with extra long filling**
For the use on large areas and for a flexible cleaning and derusting of e.g. shipyards. For a use in angle grinders. Easy working also in areas which are hard to reach.

**Cup Brushes, left-right knotted**
Left-right knotted cup brushes usually are more aggressive, hence they are often used for heavy brushing operations.
Besides the knots open less, therefore they are ideal for the treatment of edges.

**Cup Brushes**
Cup brushes with crimped wire are ideal for working on large surfaces with angle grinders. They can also be used for the removal of rust, paint, dirt or scale and for polishing.

**Special Designs**
The cup brushes can be delivered with different filling materials according to your requirements e. g. brushes with brass cups and brass wire for non-sparkling applications.

For promoting sales all standard wheel brushes are packed individually for self display. They are also available in bulk.

**Stainless Steel Brushes**
LESSMANN brushes with stainless steel wire have green cups. More information for brush applications on stainless materials you will find at www.lessmann.com

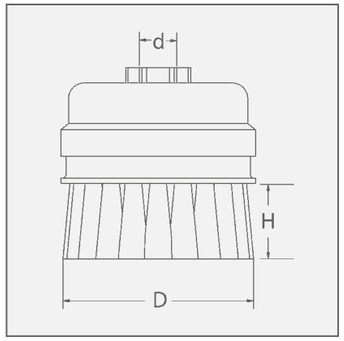

**Chunky packaging**
Many articles you receive as standard in handy covering boxes (10 pieces per carton).

**Item Nos. in bold** are available ex stock.
Consider our minimum order value for *italic printed* article numbers (see page 139).

**STH** = steel wire, high tensile, straight
**STM** = brass coated steel, straight

EAN

**Knot Cup Brushes without Bridle, 1 Row, Steel Wire, Brass coated Steel Wire**

| | D mm \| *inch* | d | H mm \| *inch* | Z | RPM max. | Pack. | STH 0.35 \| *0.014"* Art.-No. | STH 0.50 \| *0.020"* Art.-No. | STH 0.80 \| *0.031"* Art.-No. | 5 STM 0.35 \| *0.014"* Art.-No. | 5 STM 0.50 \| *0.020"* Art.-No. |
|---|---|---|---|---|---|---|---|---|---|---|---|
| 1 | 65 \| *2 1/2* | M 10 x 1.5 | 20 \| *3/4* | 18 | 12,500 | 1 | **482.114*** | **482.214*** | available on demand | | |
| 1 | 65 \| *2 1/2* | M 14 x 2.0 | 20 \| *3/4* | 18 | 12,500 | 1 | **482.117*** | **482.217*** | **482.317*** | **482.117.SM*** | **482.217.SM*** |
| 1 | 75 \| *3* | M 14 x 2.0 | 20 \| *3/4* | 20 | 12,500 | 1 | **483.117*** | **483.217*** | *483.317* | | |
| 1 | 90 \| *3 1/2* | M 14 x 2.0 | 22 \| *7/8* | 20 | 11,500 | 1 | *485.137** | **485.237*** | *485.337* | | **485.237.SM*** |
| 1 | 100 \| *4* | M 14 x 2.0 | 25 \| *1* | 26 | 9,000 | 1 | available on demand | **486.237*** | available on demand | | |
| 1 | 125 \| *5* | M 14 x 2.0 | 25 \| *1* | 32 | 7,000 | 1 | available on demand | **487.237** | available on demand | | |
| 1 | 150 \| *6* | M 14 x 2.0 | 30 \| *1 1/4* | 36 | 6,600 | 1 | available on demand | **488.237** | available on demand | | |
| 1 | 150 \| *6* | W5/8x11NC | 30 \| *1 1/4* | 36 | 6,600 | 1 | available on demand | *488.238* | available on demand | | |
| 2 | 65 \| *2 1/2* | M 14 x 2.0 | 20 \| *3/4* | 18 | 12,500 | 1 | available on demand | **482.217.WZ*** | | | |

EAN

**3 Knot Cup Brushes, without Bridle, 1 Row, Steel Wire, with extra long filling**

| D mm \| *inch* | d | H mm \| *inch* | Z | RPM max. | Pack. | STH 0.35 \| *0.014"* Art.-No. | STH 0.50 \| *0.020"* Art.-No. |
|---|---|---|---|---|---|---|---|
| 80 \| *3 1/4* | M 14 x 2.0 | 33 \| *1 1/4* | 18 | 12,500 | 25 | **480.117** | *480.217* |

EAN

**4 Knot Cup Brushes without Bridle, 2 Rows, Steel Wire**

| D mm \| *inch* | d | H mm \| *inch* | Z | RPM max. | Pack. | STH 0.35 \| *0.014"* Art.-No. | STH 0.50 \| *0.020"* Art.-No. | STH 0.80 \| *0.031"* Art.-No. |
|---|---|---|---|---|---|---|---|---|
| 100 \| *4* | W 5/8 x 11 NC | 25 \| *1* | 26+20 | 9,000 | 1 | *486.148* | *486.248* | *486.348* |
| 125 \| *5* | W 5/8 x 11 NC | 25 \| *1* | 32+26 | 7,000 | 1 | available on demand | *487.248* | available on demand |
| 150 \| *6* | W 5/8 x 11 NC | 25 \| *1* | 36+32 | 6,600 | 1 | available on demand | *488.248* | available on demand |

* Packed 10 pieces per carton

# Cup Brushes

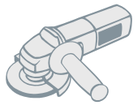

## Knot Cup Brushes with Bridle, 1 Row, Steel Wire

| D mm \| *inch* | d mm \| *inch* | H mm \| *inch* | Z | RPM max. | Pack. | **STH 0.35** \| *0.014"* Art.-No. | **STH 0.50** \| *0.020"* Art.-No. | **STH 0.80** \| *0.031"* Art.-No. |
|---|---|---|---|---|---|---|---|---|
| 80 \| *3 1/4* | 22.2 \| *7/8* | 25 \| *1* | 20 | 9,000 | 1 | *484.111* | *484.211** | **484.311*** |
| 80 \| *3 1/4* | M 14 x 2.0 | 25 \| *1* | 20 | 9,000 | 1 | **484.117*** | **484.217*** | **484.317*** |
| 80 \| *3 1/4* | W 5/8 x 11 NC | 25 \| *1* | 20 | 9,000 | 1 | *484.118* | **484.218** | *484.318* |
| 100 \| *4* | 22.2 \| *7/8* | 23 \| *7/8* | 26 | 9,000 | 1 | **486.111** | **486.211*** | **486.311*** |
| 100 \| *4* | M 14 x 2.0 | 23 \| *7/8* | 26 | 9,000 | 1 | **486.117*** | **486.217*** | **486.317*** |
| 100 \| *4* | W 5/8 x 11 NC | 23 \| *7/8* | 26 | 9,000 | 1 | *486.118* | **486.218*** | *486.318** |
| 125 \| *5* | 22.2 \| *7/8* | 25 \| *1* | 32 | 7,000 | 1 | *487.111* | **487.211** | **487.311** |
| 125 \| *5* | M 14 x 2.0 | 25 \| *1* | 32 | 7,000 | 1 | **487.117** | **487.217** | **487.317** |
| 125 \| *5* | W 5/8 x 11 NC | 25 \| *1* | 32 | 7,000 | 1 | *487.118* | **487.218** | *487.318* |

* Packed 10 pieces per carton

After removing the bridle there are the following further trimming lengths :
Ø 80 und 125: 15 mm / 5/8 inch
Ø 100: 12.5 mm / 1/2 inch

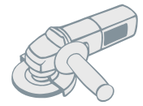

## Knot Cup Brushes without Bridle, 1 Row, Stainless Steel Wire

| | D mm \| *inch* | d | H mm \| *inch* | Z | RPM max. | Pack. | **ROH 0.35** \| *0.014"* Art.-No. | **ROH 0.50** \| *0.020"* Art.-No. |
|---|---|---|---|---|---|---|---|---|
| 1 | 65 \| *2 1/2* | M 10 x 1.5 | 20 \| *3/4* | 18 | 12,500 | 1 | *482.714* | *482.814** |
| 1 | 65 \| *2 1/2* | M 14 x 2.0 | 20 \| *3/4* | 18 | 12,500 | 1 | **482.717*** | **482.817*** |
| 1 | 75 \| *3* | M 14 x 2.0 | 20 \| *3/4* | 20 | 12,500 | 1 | available on demand | *483.817** |
| 1 | 80 \| *3 1/4* | M 14 x 2.0 | 33 \| *1 1/4* | 18 | 15,500 | 25 | **480.717** | available on demand |
| 2 | 65 \| *2 1/2* | M 14 x 2.0 | 20 \| *3/4* | 18 | 12,500 | 1 | available on demand | **482.817.WZ*** |

## 3 Knot Cup Brushes with Bridle, 1 Row, Stainless Steel Wire

| D mm \| *inch* | d mm \| *inch* | H mm \| *inch* | Z | RPM max. | Pack. | **ROH 0.35** \| *0.014"* Art.-No. | **ROH 0.50** \| *0.020"* Art.-No. |
|---|---|---|---|---|---|---|---|
| 80 \| *3 1/4* | 22.2 \| *7/8* | 25 \| *1* | 20 | 9,000 | 1 | *484.711* | *484.811* |
| 80 \| *3 1/4* | M 14 x 2.0 | 25 \| *1* | 20 | 9,000 | 1 | **484.717** | **484.817*** |
| 80 \| *3 1/4* | W 5/8 x 11 NC | 25 \| *1* | 20 | 9,000 | 1 | *484.718* | *484.818* |
| 100 \| *4* | 22.2 \| *7/8* | 23 \| *7/8* | 26 | 9,000 | 1 | *486.711* | *486.811* |
| 100 \| *4* | M 14 x 2.0 | 23 \| *7/8* | 26 | 9,000 | 1 | **486.717*** | **486.817*** |
| 100 \| *4* | W 5/8 x 11 NC | 23 \| *7/8* | 26 | 9,000 | 1 | *486.718* | *486.818* |
| 125 \| *5* | M 14 x 2.0 | 23 \| *7/8* | 32 | 9,000 | 1 | available on demand | *487.817* |

* Packed 10 pieces per carton

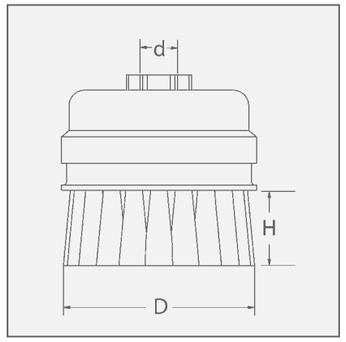


**Item Nos. in bold** are available ex stock.
Consider our minimum order value for *italic printed* article numbers (see page 139).

**STH** = steel wire, high tensile, straight
**ROH** = stainless steel wire, high tensile, straight

# Cup Brushes

## Cup Brushes with Crimped Wire

| | | | | | 1 | | | 2 | 3 |
|---|---|---|---|---|---|---|---|---|---|
| D | d | H | RPM | Pack. | STA 0.20 \| *0.008"* | STA 0.35 \| *0.014"* | STA 0.50 \| *0.020"* | ROH 0.30/0.35\|*0.012"* | MES 0.30 \| *0.012"* |
| mm \| *inch* | mm \| *inch* | | max. | | Art.-No. | Art.-No. | Art.-No. | Art.-No. | Art.-No. |
| 60 \| *2 3/8* | M 10 x 1,5 | 20 | 12,000 | 1 | | **421.164*** | | *421.364* | *421.564* |
| 60 \| *2 3/8* | M 14 x 2.0 | 20 | 12,000 | 1 | **421.147** | **421.167*** | **421.197** | **421.367*** | **421.567*** |
| 75 \| *3* | M 14 x 2.0 | 25 | 12,500 | 1 | | **423.167*** | available on demand | **423.367*** | available on demand |
| 75 \| *3* | W 5/8 x 11 NC | 25 | 12,500 | 1 | | **423.168*** | available on demand | *423.368* | available on demand |
| 80 \| *3 1/4* | 22.2 \| *7/8* | 25 | 8,500 | 1 | | **424.171*** | available on demand | *424.361* | available on demand |
| 80 \| *3 1/4* | M 14 x 2.0 | 25 | 8,500 | 1 | **424.147** | **424.177*** | **424.197** | **424.367*** | **424.567** |
| 80 \| *3 1/4* | W 5/8 x 11 NC | 25 | 8,500 | 1 | | *424.178* | *424.198* | *424.368* | available on demand |
| 100 \| *4* | 22.2 \| *7/8* | 30 | 9,000 | 1 | | **426.171*** | *426.191* | *426.361* | *426.561* |
| 100 \| *4* | M 14 x 2.0 | 30 | 9,000 | 1 | **426.147*** | **426.177*** | **426.197*** | **426.367*** | **426.567** |
| 100 \| *4* | W 5/8 x 11 NC | 30 | 9,000 | 1 | | **426.178*** | *426.198* | *426.368* | *426.568* |
| 125 \| *5* | 22.2 \| *7/8* | 30 | 8,000 | 1 | | **427.171** | available on demand | available on demand | available on demand |
| 125 \| *5* | M 14 x 2.0 | 30 | 8,000 | 1 | **427.147** | **427.177** | **427.297** | **427.367*** | **427.567*** |
| 125 \| *5* | W 5/8 x 11 NC | 30 | 8,000 | 1 | | **427.178** | *427.298* | | |
| 150 \| *6* | 22.2 \| *7/8* | 40 | 6,500 | 1 | | **429.171** | *429.191* | | |
| 150 \| *6* | M 14 x 2.0 | 40 | 6,500 | 1 | | **429.177** | **429.197** | *429.367* | |
| 150 \| *6* | W 5/8 x 11 NC | 40 | 6,500 | 1 | | **429.178** | *429.198* | | |

## Cup Brushes, Brass Coated Steel Wire, Abrasive Filament

| | | | | | | | 4 | |
|---|---|---|---|---|---|---|---|---|
| D | d | H | RPM | Pack. | STL 0.35 \| *0.014"* | STM 0.30 \| *0.012"* | SIC 80/1.2 | SIC 180/0.9 |
| mm \| *inch* | | | max. | | Art.-No. | Art.-No. | Art.-No. | Art.-No. |
| 65 \| *2 3/8* | M 14 x 2.0 | 20 | 12,000 | 1 | | **421.767** | **421.827** | *421.857* |
| 100 \| *4* | 22.2 \| *7/8* | 30 | 9,000 | 1 | *426.701* | | | |
| 100 \| *4* | M 14 x 2.0 | 30 | 9,000 | 1 | *426.707* | **426.767** | | |

* Packed 10 pieces per carton





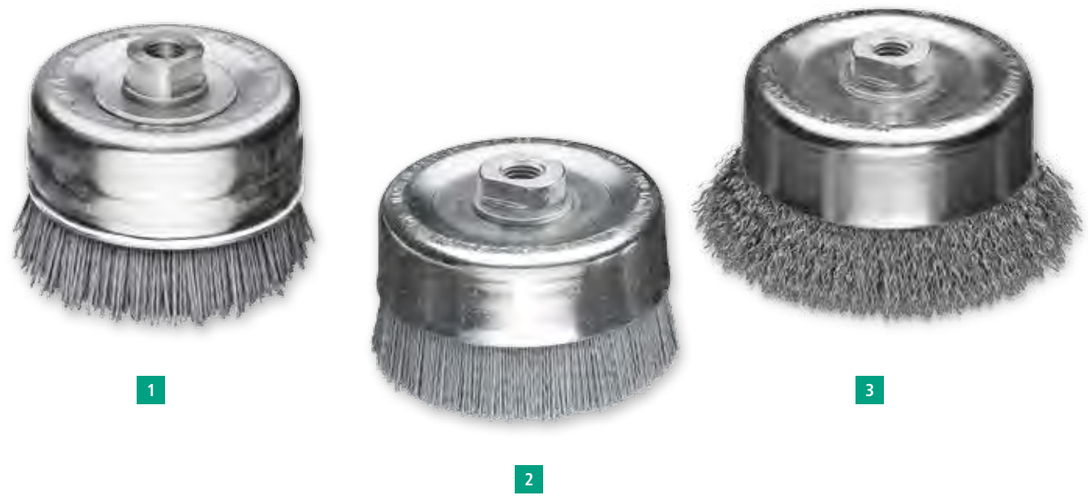


## Cup Brushes, Straight Filament

| | D | d | H | RPM | Pack. | STH 0.35 \| *0.014"* | STM 0.35 \| *0.014"* | STL 0.35 | SIC 80/1.2 | SIC K180/1.0 |
|---|---|---|---|---|---|---|---|---|---|---|
| | mm \| *inch* | mm \| *inch* | | max. | | Art.-No. | Art.-No. | Art.-No. | Art.-No. | Art.-No. |
| 1 | 90 \| *3 1/2* | M 14 | 25 | 9,000 | 1 | | | | *446.827** | ***446.857**** |
| 1 | 90 \| *3 1/2* | 22.2 \| *7/8* | 25 | 9,000 | 1 | | | | available on demand | *446.851** |
| 3 | 100 \| *4* | M 14 | 30 | 9,000 | 1 | *446.277** | *446.777** | | | |
| 3 | 100 \| *4* | 22.2 \| *7/8* | 30 | 9,000 | 1 | *446.271** | *446.771** | *446.701** | | |
| 2 | 110 \| *4 1/2* | M 14 | 30 | 7,000 | 1 | | | | **447.827*** | **447.857*** |
| 3 | 125 \| *5* | M 14 | 30 | 7,000 | 1 | **447.277*** | available on demand | available on demand | | |

1 with bridle | * Packed 10 pieces per carton

**Cup Brushes with Straight Wire**
They are used for deburring surfaces, mostly in machining centers. The brushes are available with steel wire, stainless steel wire, abrasive nylon or any other filament. Due to the straight cup the filament of the brush is less flaring out and more cone points of the bristles work on the surface. Please contact us for more information!

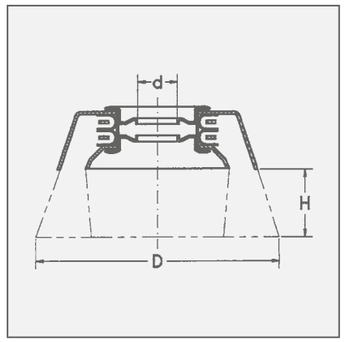


**Item Nos. in bold** are available ex stock.
Consider our minimum order value for *italic printed* article numbers (see page 139).

**STA** = steel wire, crimped
**STH** = steel wire, high tensile, straight
**STM** = brass coated steel, crimped
**STL** = cord wire, crimped
**ROH** = stainless steel wire, high tensile, straight
**MES** = brass wire, crimped
**SIC** = silicon carbide bristles

# Bevel Brushes

**Bevel Brushes**
The special shape of these brushes enables the user to work in hard to reach places. The knots are left hand twisted to increase stability. For promoting sales all standard knot bevel brushes are packed individually for self display. These brushes are also available bulk packed.

**Wheel Brushes with thread**
Like bevel brushes, wheel brushes with a thread are ideal for working in areas which are hard to reach. Usually the brushes are used on angle grinders.

Other measurements and filling materials are available on request.

**Stainless Steel Brushes**
LESSMANN brushes with stainless steel wire have green cups. We use wire with material number 1.4310. Material number 1.4401 can be used on request.
More information for brush applications on stainless materials you will find at www.lessmann.com

**Bevel Brushes, left-right knotted**
Left-right knotted bevel brushes usually are more aggressive, hence they are often used for heavy brushing operations.
Besides the knots open less, therefore there are ideal for the treatment of edges.

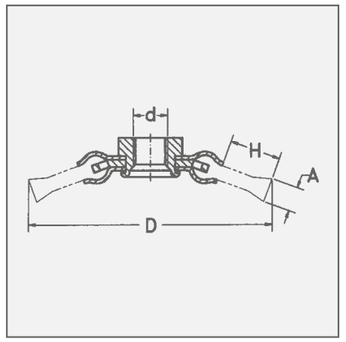


**Item Nos. in bold** are available ex stock.
Consider our minimum order value for *italic printed* article numbers (see page 139).

| | |
|---|---|
| **STA** | = steel wire, crimped |
| **STM** | = brass coated steel wire |
| **STH** | = steel wire, high tensile, straight |
| **ROF** | = stainless steel wire, crimped |
| **ROH** | = stainless steel wire, high tensile, straight |

EAN **Knot Bevel Brushes, Steel Wire, Stainless Steel Wire**

| | D mm \| *inch* | A mm \| *inch* | d mm \| *inch* | H | Z | RPM max. | Pack. | 1 STH 0.35 \| *0.014"* Art.-No. | 1 STH 0.50 \| *0.020"* Art.-No. | 2 ROH 0.35 \| *0.014"* Art.-No. | 2 ROH 0.50 \| *0.020"* Art.-No. |
|---|---|---|---|---|---|---|---|---|---|---|---|
| | 100 \| *4* | 12 \| *1/2* | M 10 x 1.5 | 20 | 18 | 12,500 | 1 | | **471.254** | | |
| | 100 \| *4* | 12 \| *1/2* | M 14 x 2.0 | 20 | 18 | 12,500 | 1 | **471.157*** | **471.257*** | **471.757*** | **471.857*** |
| | 100 \| *4* | 12 \| *1/2* | 22.2 \| *7/8* | 20 | 18 | 12,500 | 1 | | **471.251** | | |
| | 115 \| *4 1/2* | 12 \| *1/2* | M 14 x 2.0 | 24 | 20 | 15,000 | 1 | **472.157*** | **472.257*** | **472.757*** | **472.857*** |
| | 115 \| *4 1/2* | 12 \| *1/2* | 22.2 \| *7/8* | 24 | 20 | 15,000 | 1 | | **472.251** | | |
| | 115 \| *4 1/2* | 12 \| *1/2* | M 14 x 2.0 | 24 | 24 | 15,000 | 1 | | **472.257.V4*** | | |
| | 125 \| *5* | 12 \| *1/2* | M 14 x 2.0 | 29 | 20 | 15,000 | 1 | | **473.257*** | | |
| 3 | 115 \| *4 1/2* | 12 \| *1/2* | M 14 x 2.0 | 24 | 20 | 15,000 | 1 | | **472.257.WZ*** | | **472.857.WZ*** |

EAN **4 Knot Bevel Brushes, Steel Wire, Brass coated steel wire**

| D mm \| *inch* | A mm \| *inch* | d mm \| *inch* | H | Z | RPM max. | Pack. | STM 0.35 \| *0.014"* Art.-No. | STM 0.50 \| *0.020"* Art.-No. |
|---|---|---|---|---|---|---|---|---|
| 100 \| *4* | 12 \| *1/2* | M 14 x 2.0 | 20 | 18 | 12,500 | 1 | **471.157.SM*** | |
| 115 \| *4 1/2* | 12 \| *1/2* | M 14 x 2.0 | 24 | 20 | 15,000 | 1 | | **472.257.SM*** |

EAN **Bevel Brushes, Crimped Wire**

| D mm \| *inch* | A mm \| *inch* | d | H | RPM max. | Pack. | 5 STA 0.35 \| *0.014"* Art.-No. | ROF 0.30 \| *0.012"* Art.-No. | 6 STM 0.30 \| *0.012"* Art.-No. |
|---|---|---|---|---|---|---|---|---|
| 100 \| *4* | 10 \| *3/8* | M 14 x 2.0 | 20 | 15,000 | 1 | **422.177*** | **422.367*** | **422.767** |

EAN **7 Wheel Brushes, crimped wire, with thread**

| D mm \| *inch* | A mm \| *inch* | d | H | RPM max. | Pack. | ROF 0.30 \| *0.012"* Art.-No. | STM 0.30 \| *0.012"* Art.-No. |
|---|---|---|---|---|---|---|---|
| 115 \| *4 1/2* | 12 \| *1/2* | M 14 | 24 | 12,500 | 1 | *304.361.14* | **304.761.14** |
| 125 \| *5* | 13 \| *1/2* | M 14 | 19.5 | 12,500 | 1 | **335.361.14** | **335.761.14** |

* Packed 10 pieces per carton

# Brushes for grass trimmers

**Brushes for grass trimmers**
Knotted brushes on grass trimmers are ideal for removing weeds on grass pavers, curbstones, cobbled areas or other spots which are hard to reach. Those brushes clean larger areas like courtyards, terraces or longer alleys effortless and sustainable.

Besides, brushes are ecologically friendly and they remove weeds fast and effectively.

**Attention:** When working with brushes on grass trimmers, please be aware of stringent safety rules. Please take note of the data sheet we attach the brushes or have a look at www.lessmann.com.

Right adaption of the brush

Wheel Brushes

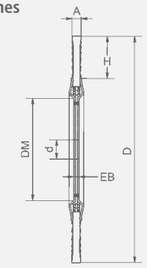


ZF = Knot type
Z = number of knots, R = number of rows

Bevel Brushes

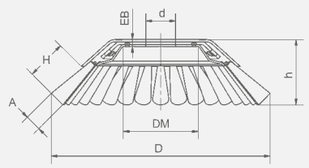


**Item Nos. in bold** are available ex stock.
Consider our minimum order value for *italic printed* article numbers (see page 139).

**STM** = brass coated steel, straight

**STH** = steel wire, high tensile, straight

EAN

**Knotted Wheel Brushes, for grass trimmers**

| | D mm \| *inch* | A mm \| *inch* | EB | DM | H mm \| *inch* | Z | d mm \| *inch* | ZF | RPM max. | Pack. | **STH 0.50** \| *0.020"* Art.-No. |
|---|---|---|---|---|---|---|---|---|---|---|---|
| 1 | 175 \| *6 7/8* | 6 \| *1/4* | 8 | 68 | 34 \| *1 1/4* | 40 | 20 \| *3/4* | B | 12,500 | 1 | **475.260.01** |
| 1 | 175 \| *6 7/8* | 6 \| *1/4* | 6 | 68 | 34 \| *1 1/4* | 40 | 25.4 \| *1* | B | 12,500 | 1 | **475.261.01** |
| 1 | 200 \| *8* | 6 \| *1/4* | 8 | 68 | 46 \| *1 49/64* | 40 | 20 \| *3/4* | B | 12,500 | 1 | **476.260.01** |
| 1 | 200 \| *8* | 6 \| *1/4* | 6 | 68 | 46 \| *1 49/64* | 40 | 25.4 \| *1* | B | 12,500 | 1 | **476.261.01** |
| 2 | 250 \| *10* | 6 \| *1/4* | 3 | 83 | 42 \| *1 5/8* | 56 | 20 \| *3/4* | B | 10,000 | 1 | **477.260.01** |
| 2 | 250 \| *10* | 6 \| *1/4* | 3 | 83 | 42 \| *1 5/8* | 56 | 25.4 \| *1* | B | 10,000 | 1 | **477.261.01** |
| 2 | 300 \| *12* | 6 \| *1/4* | 3 | 83 | 67 \| *2 5/8* | 56 | 20 \| *3/4* | B | 10,000 | 1 | **478.260.01** |

EAN

**Knotted Bevel Brushes, for grass trimmers**

| | D mm \| *inch* | A mm \| *inch* | EB | DM | H mm \| *inch* | h | Z | d mm \| *inch* | ZF | RPM max. | Pack. | **STH 0.50** \| *0.020"* Art.-No. | **STM 0.50** \| *0.020"* Art.-No. |
|---|---|---|---|---|---|---|---|---|---|---|---|---|---|
| 3 | 170 \| *6 3/4* | 12 \| *1/2* | 6 | 50 | 50 \| *2* | 58 | 32 | 20 \| *3/4* | B | 10,000 | 1 | **475.250.01** | |
| 3 | 170 \| *6 3/4* | 12 \| *1/2* | 6 | 50 | 50 \| *2* | 58 | 32 | 25.4 \| *1* | B | 10,000 | 1 | **475.251.01** | |
| 4 | 200 \| *8* | 14 \| *9/16* | 6 | 64 | 37 \| *1 1/2* | 55 | 36 | 20 \| *3/4* | B | 10,000 | 1 | **476.250.01** | **476.250.SM** |
| 4 | 200 \| *8* | 14 \| *9/16* | 6 | 64 | 37 \| *1 1/2* | 55 | 36 | 25.4 \| *1* | B | 10,000 | 1 | **476.251.01** | **476.251.SM** |

The brushes are suitable for all common grass trimmer and brush cutter models. Possible special diameters or special bores are deliverable on demand.

LESSMANN®
THE GERMAN BRUSH COMPANY

# BRUSHES WITH SHANK

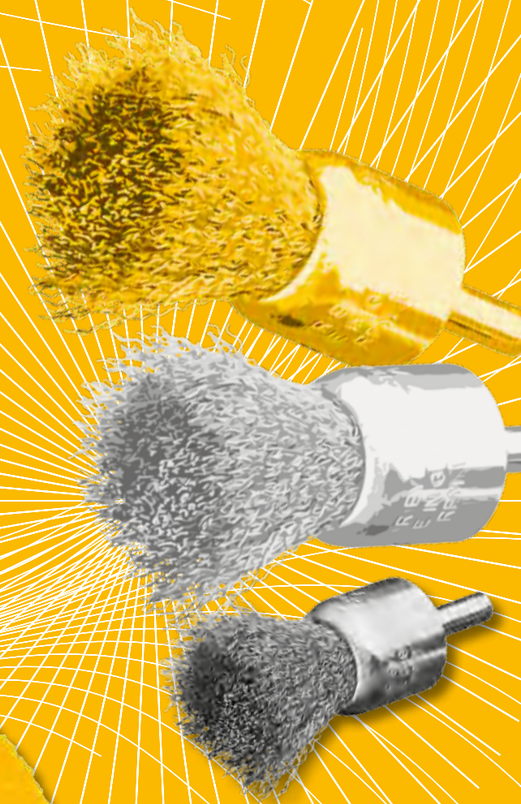

# Wheel Brushes with Shank

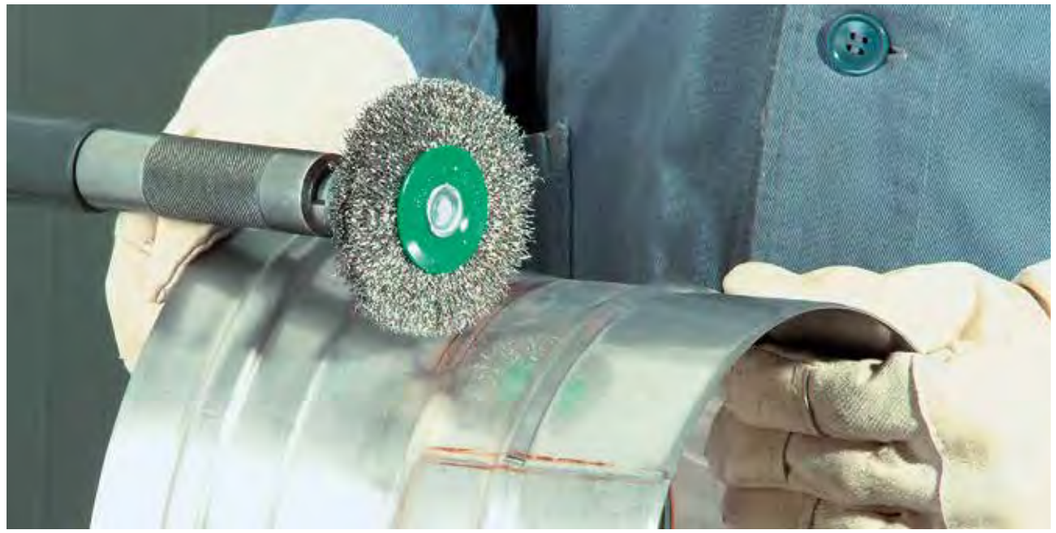

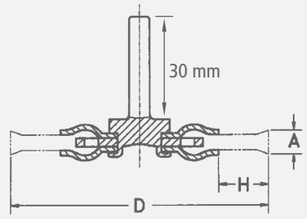


Z = number of knots, R = number of rows

**Wheel Brushes with Shank**
The wheel brushes shown on these pages are manufactured with a mounted shank for professional use. Tight filling wire and balanced running make these brushes excellent tools.

**Knotted Wheel Brushes with Shank**
It does not matter if the brush has one or two rows, the brush is the prefect tool for removing underseal, rust deburring, roughening etc. For working in narrow places we recommend our brush 417.198.11, which is an especially narrow Brush.

**Encapsulated Brushes**
By embedding in tough plastic the filling width always remains the same and early break of the wires can be prevented. It's the perfect tool for long lasting and safe working. The colour on the picture can differ from the colour on the brush.

**Wheel brushes with shank completely stainless steel**
All the inner and outer parts of these brushes such as shanks, side plates, rings, etc. are made of stainless steel. Therefore these brushes are the perfect tool for working in damp and difficult places. These brushes do not have green side plates.

**Structuring Brushes with Shank**
These brushes are special brushes which can be used for wood grain surfaces.

**Shank Brushes with Silicon Carbide Bristles**
The high quality bristles with silicon carbide can be used for deburring, polishing and structuring of stainless steel, aluminium and plastic surfaces. Besides the articles mentioned on this page we can also supply other grits, diameters and widths.

**Item Nos. in bold** are available ex stock.
Consider our minimum order value for *italic printed* article numbers (see page 139).

**STA** = steel wire, crimped
**STH** = steel wire, high tensile, straight
**ROH** = stainless steel wire, high tensile

**Stainless Steel Brushes**
LESSMANN brushes with stainless steel wire have green site plates. We use wire with material number 1.4310. Material number 1.4401. can be used on request.
More information for brush applications on stainless materials you will find at www.lessmann.com

The brushes have a 6 mm shank. On demand the brushes can also be supplied with 1/4" shanks (USA execution).

Brushes with other diameters, filling widths and filling material are available on request.

1 2 3

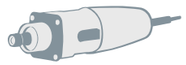

**Knot Wheel Brushes with Shank Ø 6 mm**

| | D mm \| *inch* | A mm \| *inch* | H mm \| *inch* | Z | R | RPM max. | Pack. | **STH 0.35** \| *0.014"* Art.-No. | **STH 0.50** \| *0.020"* Art.-No. | **ROH 0.50** \| *0.020"* Art.-No. |
|---|---|---|---|---|---|---|---|---|---|---|
| 1 | 75 \| *3* | 9 \| *3/8* | 15 \| *5/8* | 18 | 1 | 25,000 | 10 | | **417.198.11** | |
| 1 | 75 \| *3* | 12 \| *1/2* | 15 \| *5/8* | 18 | 1 | 25,000 | 10 | **417.168** | **417.198** | **417.398** |
| 2 | 75 \| *3* | 16 \| *5/8* | 15 \| *5/8* | 18 | 2 | 25,000 | 10 | | **417.199** | **417.399** |

**Wheel Brushes with Shank Ø 6 mm, Encapsulated**

| | D mm \| *inch* | A mm \| *inch* | H mm \| *inch* | RPM max. | Pack. | **STA 0.30** \| *0.012"* Art.-No. |
|---|---|---|---|---|---|---|
| 3 | 50 \| *2* | 8 \| *5/16* | 13 \| *1/2* | 15,000 | 10 | **415.160** |
| 3 | 60 \| *2 3/8* | 8 \| *5/16* | 18 \| *3/4* | 15,000 | 10 | **416.160** |
| 3 | 76 \| *3* | 8 \| *5/16* | 23 \| *7/8* | 15,000 | 10 | **417.160** |

# Wheel Brushes with Shank

## Wheel Brushes with Shank Ø 6 mm

| D mm \| *inch* | A | H | RPM max. | Pack. | 1 \| 2 STA 0.15 \| *0.006"* Art.-No. | STA 0.20 \| *0.008"* Art.-No. | STA 0.30 \| *0.012"* Art.-No. | STA 0.50 \| *0.020"* Art.-No. | 3 STM 0.25 \| *0.010"* Art.-No. |
|---|---|---|---|---|---|---|---|---|---|
| 20 \| *3/4* | 6 | 3 | 20,000 | 10 | *411.132* | **411.142** | | | |
| 30 \| *1 1/4* | 6 | 6 | 20,000 | 10 | **413.132** | **413.142** | **413.162** | | |
| 30 \| *1 1/4* | 9 | 6 | 20,000 | 10 | *413.133* | **413.143** | **413.163** | | |
| 40 \| *1 3/8* | 8 | 9 | 18,000 | 10 | **414.132** | **414.142** | **414.162** | **414.192** | *414.752* |
| 40 \| *1 3/8* | 11 | 9 | 18,000 | 10 | *414.133* | **414.143** | **414.163** | *414.193* | available on demand |
| 50 \| *2* | 10 | 12 | 15,000 | 10 | *415.132* | **415.142** | **415.162** | **415.192** | **415.752** |
| 50 \| *2* | 14 | 12 | 15,000 | 10 | **415.133** | **415.143** | **415.163** | *415.193* | available on demand |
| 60 \| *2 3/8* | 10 | 17 | 15,000 | 10 | *416.132* | **416.142** | **416.162** | available on demand | *416.752* |
| 60 \| *2 3/8* | 14 | 17 | 15,000 | 10 | **416.133** | **416.143** | **416.163** | *416.193* | available on demand |
| 70 \| *2 3/4* | 12 | 19 | 15,000 | 10 | *417.132* | **417.142** | **417.162** | **417.192** | **417.752** |
| 70 \| *2 3/4* | 16 | 19 | 15,000 | 10 | **417.133** | **417.143** | **417.163** | available on demand | available on demand |
| 80 \| *3 1/4* | 12 | 20 | 15,000 | 10 | available on demand | **418.142** | **418.162** | *418.192* | *418.752* |
| 80 \| *3 1/4* | 18 | 20 | 15,000 | 10 | available on demand | **418.143** | **418.163** | available on demand | available on demand |
| 70 \| *2 3/4* | 10 | 14 | 15,000 | 10 | | | | **417.196*** | |

## Structuring Brushes with Shank Ø 8 mm

| D mm \| *inch* | A | H | RPM max. | Pack. | 4 STM 0.25 \| *0.010"* Art.-No. | SIC 80/1.4 Art.-No. |
|---|---|---|---|---|---|---|
| 80 \| *3 1/4* | 35 | 28 | 4,000 | 1 | **418.704** | *418.803* |

* cambered plates

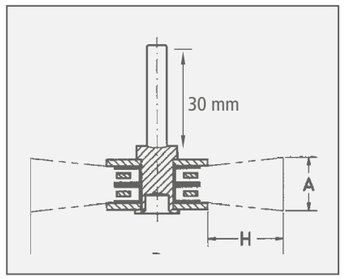


**Item Nos. in bold** are available ex stock.
Consider our minimum order value for *italic printed* article numbers (see page 139).

**STA** = steel wire, crimped
**STM** = brass coated steel, crimped
**ROF** = stainless steel wire, crimped
**MES** = brass wire, crimped
**SIC** = silicon carbide bristles

## Wheel Brushes with Shank Ø 6 mm, Stainless Steel and Brass Wire

| D mm \| *inch* | A mm \| *inch* | H mm \| *inch* | RPM max. | Pack. | 1 ROF 0.20 \| *0.008"* Art.-No. | ROF 0.30 \| *0.012"* Art.-No. | 2 MES 0.20 \| *0.008"* Art.-No. |
|---|---|---|---|---|---|---|---|
| 20 \| *3/4* | 6 \| *1/4* | 3 \| *1/8* | 20,000 | 10 | **411.342** | | **411.542** |
| 30 \| *1 1/4* | 6 \| *1/4* | 6 \| *1/4* | 20,000 | 10 | **413.342** | *413.362* | **413.542** |
| 30 \| *1 1/4* | 9 \| *3/8* | 6 \| *1/4* | 20,000 | 10 | **413.343** | *413.363* | *413.543* |
| 40 \| *1 3/8* | 8 \| *5/16* | 9 \| *3/8* | 18,000 | 10 | **414.342** | **414.362** | **414.542** |
| 40 \| *1 3/8* | 11 \| *4/9* | 9 \| *3/8* | 18,000 | 10 | **414.343** | available on demand | *414.543* |
| 50 \| *2* | 10 \| *3/8* | 12 \| *1/2* | 15,000 | 10 | **415.342** | **415.362** | **415.542** |
| 50 \| *2* | 14 \| *9/16* | 12 \| *1/2* | 15,000 | 10 | **415.343** | **415.363** | **415.543** |
| 60 \| *2 3/8* | 10 \| *3/8* | 17 \| *5/8* | 15,000 | 10 | **416.342** | **416.362** | **416.542** |
| 60 \| *2 3/8* | 14 \| *9/16* | 17 \| *5/8* | 15,000 | 10 | **416.343** | **416.363** | **416.543** |
| 70 \| *2 3/4* | 12 \| *1/2* | 19 \| *3/4* | 15,000 | 10 | **417.342** | **417.362** | **417.542** |
| 70 \| *2 3/4* | 16 \| *5/8* | 19 \| *3/4* | 15,000 | 10 | **417.343** | **417.363** | **417.543** |
| 80 \| *3 1/4* | 12 \| *1/2* | 20 \| *3/4* | 15,000 | 10 | **418.342** | **418.362** | **418.542** |
| 80 \| *3 1/4* | 18 \| *3/4* | 20 \| *3/4* | 15,000 | 10 | **418.343** | **418.363** | **418.543** |

## 3 Wheel Brushes with Shank Ø 6 mm, Completely Stainless

| D mm \| *inch* | A mm \| *inch* | H mm \| *inch* | RPM max. | Pack. | ROF 0.20 \| *0.008"* Art.-No. | ROF 0.30 \| *0.012"* Art.-No. |
|---|---|---|---|---|---|---|
| 50 \| *2* | 15 \| *5/8* | 12 \| *1/2* | 15,000 | 10 | **415.301** | **415.302** |
| 60 \| *2 3/8* | 17 \| *5/8* | 17 \| *5/8* | 15,000 | 10 | **416.303** | *416.302* |
| 70 \| *2 3/4* | 18 \| *3/4* | 19 \| *3/4* | 15.000 | 10 | **417.306** | **417.309** |

## 4 Wheel Brushes with Shank Ø 6 mm, Silicon Carbide Bristles

| D mm \| *inch* | A mm \| *inch* | H mm \| *inch* | RPM max. | Pack. | SIC 120/0.6 Art.-No. | SIC 120/1.1 Art.-No. | SIC 180/1.0 Art.-No. | SIC 320/0.6 Art.-No. |
|---|---|---|---|---|---|---|---|---|
| 30 \| *1 1/4* | 6 \| *1/4* | 6 \| *1/4* | 18,000 | 10 | **413.841** | | | **413.871** |
| 50 \| *2* | 10 \| *3/8* | 12 \| *1/2* | 15,000 | 10 | | **415.842** | *415.852* | **415.872** |
| 70 \| *2 3/4* | 12 \| *1/2* | 20 \| *3/4* | 15,000 | 10 | | **417.842** | **417.852** | **417.872** |
| 80 \| *3 1/4* | 14 \| *9/16* | 22 \| *7/8* | 15,000 | 10 | | **418.842** | available on demand | **418.872** |

# Cup Shank Brushes

**Cup Brushes with Shank**
Ideal for working on medium and large areas.

**Cup Shank Brushes with Plastic Cup**
Cup Shank Brushes with Plastic Cup and stainless steel wire especially are used for applications on stainless steel materials.
The plastic cup prevents contact with the working piece, therefore it protects from corrosion or other foreign particles.

Brushes with steel and stainless steel wire can be used at higher RPM and can therefore be used on electrical and air driven grinding machines. These models are known for their high density of filling material and therefore they have a very long lifetime.

The brushes with silicon carbide bristles can be used for deburring, polishing or structuring of stainless steel, aluminium and plastic surfaces.

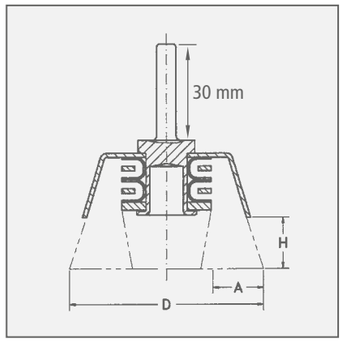


**Item Nos. in bold** are available ex stock.
Consider our minimum order value for *italic printed* article numbers (see page 139).

| | |
|---|---|
| **STA** | = steel wire, crimped |
| **STH** | = steel wire, high tensile, straight |
| **ROF** | = stainless steel wire, crimped |
| **MES** | = brass wire, crimped |
| **SIC** | = silicon carbide bristles |

BRUSHES WITH SHANK

**Cup Brushes with Shank Ø 6 mm**

| D | A | H | RPM | Pack. | 1 STA 0.20 \| *0.008"* | 1 STA 0.30 \| *0.012"* | 1 ROF 0.20 \| *0.008"* | 1 ROF 0.30 \| *0.012"* | 2 MES 0.20 \| *0.008"* | 2 MES 0.30 \| *0.012"* |
|---|---|---|---|---|---|---|---|---|---|---|
| mm \| *inch* | mm \| *inch* | mm \| *inch* | max. | | Art.-No. | Art.-No. | Art.-No. | Art.-No. | Art.-No. | Art.-No. |
| 40 \| *1 3/8* | 15 \| *5/8* | 20 \| *3/4* | 10.500 | 10 | **434.142** | **434.162** | *434.342* | **434.362** | **434.542** | |
| 50 \| *2* | 22 \| *7/8* | 20 \| *3/4* | 10.500 | 10 | **435.142** | **435.162** | *435.342* | **435.362** | **435.542** | **435.562** |
| 60 \| *2 3/8* | 25 \| *1* | 25 \| *1* | 8.000 | 10 | available on demand | **436.162** | available on demand | **436.362** | available on demand | |
| 70 \| *2 3/4* | 30 \| *1 1/4* | 25 \| *1* | 6.000 | 10 | **437.142** | **437.162** | *437.342* | **437.362** | **437.542** | |

**3 Cup Brushes with Shank Ø 6 mm and Plastic Cup**

| D | A | H | RPM | Pack. | ROF 0.20 \| *0.008"* | ROF 0.25 \| *0.010"* | ROF 0.30 \| *0.012"* |
|---|---|---|---|---|---|---|---|
| mm \| *inch* | mm \| *inch* | mm \| *inch* | max. | | Art.-No. | Art.-No. | Art.-No. |
| 40 \| *1 3/8* | 20 \| *3/4* | 30 \| *1 1/4* | 15,000 | 10 | **434.345** | **434.355** | **434.365** |
| 50 \| *2* | 25 \| *1* | 28 \| *1* | 10,500 | 10 | **435.345** | **435.355** | **435.365** |

**4 Cup Brushes with Shank Ø 6 mm, Silicon Carbide Bristles**

| D | A | H | RPM | Pack. | SIC 80/1.2 | SIC 320/0.6 |
|---|---|---|---|---|---|---|
| mm \| *inch* | mm \| *inch* | mm \| *inch* | max. | | Art.-No. | Art.-No. |
| 50 \| *2* | 10 \| *3/8* | 20 \| *3/4* | 4,500 | 10 | **430.128** | **430.129** |
| 75 \| *3* | 15 \| *5/8* | 22 \| *7/8* | 4,500 | 10 | **430.138** | **430.139** |

**5 Knot End Brushes with Shank Ø 6 mm, Steel Wire**

| D | H | Z | RPM | Pack. | STH 0.50 \| *0.020"* |
|---|---|---|---|---|---|
| mm \| *inch* | mm \| *inch* | mm \| *inch* | max. | | Art.-No. |
| 75 \| *3* | 20 \| *3/4* | 18 \| *3/4* | 4,500 | 10 | **483.230** |

# End Brushes

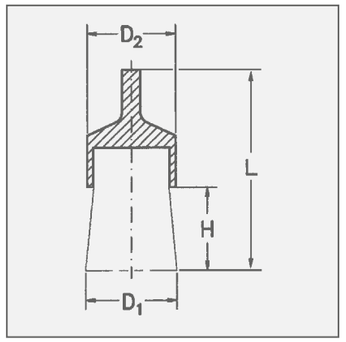


**Item Nos. in bold** are available ex stock.
Consider our minimum order value for *italic printed* article numbers (see page 139).

**STA** = steel wire, crimped
**STH** = steel wire, high tensile, straight
**ROF** = stainless steel wire, crimped

**End Brushes with Shank**
For cleaning and deburring in hard to reach areas, removal of paint, rubber excess, cleaning of moulds and castings. Also for working on edges and curves, and in the inside of the bores, etc. End brushes are also available in other shapes, spreaded or pointed.

These brushes are perfect for fast moving tools. On demand also with 1/4" shank available.

**Special End Brushes, crimping**
The special end brushes with narrow crimped wire are characterized by its dense filling. These brushes show a harder brushing effect than brushes with normal crimped wire (e.g. page 70). These brushes are also available with extra long shanks or different diameters.

**Square End Brushes**
This special tool enables e. g. cleaning of blind holes and processing of bottom and side surfaces in one step.
It's perfect for cleaning and easy deburring applications, e. g. square bores. Other diameters available on demand.

**Encapsulated Brushes**
By embedding in tough plastic the filling width always remains the same and early break of the wires can be prevented. It's the perfect tool for long lasting and safe working. The advantages when working with encapsulated brushes are longer lifetime and harder brush effect. However, it might be possible that the brush will leave marks on the work piece.

**Stainlessless Steel Brushes**
Further information for brushing on stainless steel you will find on www.lessmann.com

**Special Design**
For your order please state your requirements regarding the measures and wires.

**Special End Brushes with Shank Ø 6 mm, narrow crimping**

| | D1 mm \| *inch* | D2 mm \| *inch* | H mm \| *inch* | L mm \| *inch* | RPM max. | Pack. | **STH 0.35** \| *0.014"* Art.-No. | **STH 0.50** \| *0.020"* Art.-No. |
|---|---|---|---|---|---|---|---|---|
| 1 | 11 \| *4/9* | 12 \| *1/2* | 25 \| *1* | 71 \| *2 3/4* | 12,000 | 10 | **466.171** | available on demand |
| 2 | 11 \| *4/9* | 12 \| *1/2* | 25 \| *1* | 71 \| *2 3/4* | 12,000 | 10 | **466.172*** | available on demand* |
| 1 | 19 \| *3/4* | 22 \| *7/8* | 29 \| *1 1/8* | 72 \| *2 3/4* | 12,000 | 10 | *460.121* | available on demand |
| 2 | 19 \| *3/4* | 22 \| *7/8* | 29 \| *1 1/8* | 72 \| *2 3/4* | 12,000 | 10 | *460.122** | available on demand* |

**3 Square End Brushes with Shank Ø 6 mm**

| D1 mm \| *inch* | A mm \| *inch* | L mm \| *inch* | RPM max. | Pack. | **STA 0.15** \| *0.006"* Art.-No. | **STA 0.25** \| *0.010"* Art.-No. | **ROF 0.30** \| *0.012"* Art.-No. |
|---|---|---|---|---|---|---|---|
| 25.4 \| *1* | 8 \| *5/16* | 100 \| *4* | 4,500 | 10 | *469.131* | *469.151* | *469.362* |
| 31.8 \| *1 1/4* | 8 \| *5/16* | 100 \| *4* | 4,500 | 10 | *469.133* | *469.153* | available on demand |
| 38.1 \| *1 1/2* | 8 \| *5/16* | 100 \| *4* | 4,500 | 10 | available on demand | available on demand | available on demand |
| 50.8 \| *1* | 8 \| *5/16* | 100 \| *4* | 4,500 | 10 | available on demand | available on demand | available on demand |

**4 End Brushes with Shank Ø 6 mm, Encapsulated**

| D1 mm \| *inch* | D2 mm \| *inch* | H mm \| *inch* | L mm \| *inch* | RPM max. | Pack. | **STA 0.30** \| *0.012"* Art.-No. |
|---|---|---|---|---|---|---|
| 10 \| *3/8* | 10 \| *3/8* | 20 \| *3/4* | 65 \| *2 1/2* | 15,000 | 10 | **451.160** |
| 16 \| *5/8* | 16 \| *5/8* | 25 \| *1* | 72 \| *2 7/8* | 15,000 | 10 | **452.160** |
| 22 \| *7/8* | 22 \| *7/8* | 25 \| *1* | 72 \| *2 7/8* | 15,000 | 10 | **453.160** |
| 28 \| *1* | 28 \| *1* | 30 \| *1 1/4* | 75 \| *3* | 10,000 | 10 | **456.160** |

* pointed

# End Brushes

## End Brushes with Shank Ø 6 mm, Steel Wire

| | D1 mm \| *inch* | D2 mm \| *inch* | H mm \| *inch* | L mm \| *inch* | RPM max. | Pack. | **STA 0.15** \| *0.006"* Art.-No. | **STA 0.20** \| *0.008"* Art.-No. | **STA 0.30** \| *0.012"* Art.-No. | **STA 0.50** \| *0.020"* Art.-No. |
|---|---|---|---|---|---|---|---|---|---|---|
| 1 | 12 \| *1/2* | 10 \| *3/8* | 20 \| *3/4* | 60 \| *2 3/8* | 20,000 | 10 | **451.131** | **451.141** | **451.161** | **451.191** |
| 2 | 12 \| *1/2* | 10 \| *3/8* | 20 \| *3/4* | 60 \| *2 3/8* | 20,000 | 10 | | | **451.162*** | *451.192** |
| 3 | 12 \| *1/2* | 10 \| *3/8* | 20 \| *3/4* | 120 \| *4 3/4* | 15,000 | 10 | **458.131** | **458.141** | **458.161** | **458.191** |
| 4 | 17 \| *5/8* | 16 \| *5/8* | 22 \| *7/8* | 65 \| *2 1/2* | 20,000 | 10 | *452.131* | **452.141** | **452.161** | **452.191** |
| 5 | 23 \| *7/8* | 22 \| *7/8* | 25 \| *1* | 68 \| *2 3/4* | 18,000 | 10 | **453.131** | **453.141** | **453.161** | **453.191** |
| | 30 \| *1 1/4* | 29 \| *1 1/8* | 25 \| *1* | 68 \| *2 3/4* | 18,000 | 10 | **456.131** | **456.141** | **456.161** | **456.191** |
| | 50 \| *2* | 22 \| *7/8* | 18 \| *3/4* | 68 \| *2 3/4* | 18,000 | 10 | | | **453.163**** | |
| 6 | 70 \| *2 3/4* | 29 \| *1 1/8* | 25 \| *1* | 68 \| *2 3/4* | 18,000 | 10 | | | **456.163**** | |

## 9 End Brushes with Shank Ø 6 mm, Steel Wire high tensile, dense version

| D1 mm \| *inch* | D2 mm \| *inch* | H mm \| *inch* | L mm \| *inch* | RPM max. | Pack. | **STH 0.30** \| *0.012"* Art.-No. |
|---|---|---|---|---|---|---|
| 12 \| *1/2* | 12 \| *1/2* | 20 \| *3/4* | 66 \| *2 1/2* | 20,000 | 10 | **451.261.BD** |
| 17 \| *5/8* | 16 \| *5/8* | 22 \| *7/8* | 65 \| *2 1/2* | 20,000 | 10 | **452.261.BD** |
| 23 \| *7/8* | 22 \| *7/8* | 25 \| *1* | 68 \| *2 3/4* | 18,000 | 10 | **453.261.BD** |
| 30 \| *1 1/4* | 29 \| *1 1/8* | 25 \| *1* | 68 \| *2 3/4* | 18,000 | 10 | **456.261.BD** |

## End Brushes with Shank Ø 6 mm, Brassed Steel Wire, Cord Wire

| | | | | | | 7 | 8 | |
|---|---|---|---|---|---|---|---|---|
| D1 mm \| *inch* | D2 mm \| *inch* | H mm \| *inch* | L mm \| *inch* | RPM max. | Pack. | **STM 0.25** \| *0.010"* Art.-No. | **STL 0.175** \| *0.007"* Art.-No. | **STL 0.22** \| *0.009"* Art.-No. |
| 17 \| *5/8* | 16 \| *5/8* | 22 \| *7/8* | 65 \| *2 1/2* | 20,000 | 10 | **452.751** | *452.703* | *452.705* |
| 23 \| *7/8* | 22 \| *7/8* | 25 \| *1* | 68 \| *2 3/4* | 18,000 | 10 | **453.751** | *453.703* | *453.705* |
| 30 \| *1 1/4* | 29 \| *1 1/8* | 25 \| *1* | 68 \| *2 3/4* | 18,000 | 10 | *456.751* | *456.703* | *456.705* |

* pointed | ** spreaded

## End Brushes with Shank Ø 6 mm, Stainless Steel and Brass Wire

| | | | | | | | 1 | | 2 | |
|---|---|---|---|---|---|---|---|---|---|---|
| | D1 mm \| *inch* | D2 mm \| *inch* | H | L | RPM max. | Pack. | **ROF 0.20** \| *0.008"* Art.-No. | **ROF 0.30** \| *0.012"* Art.-No. | **MES 0.20** \| *0.008"* Art.-No. | **MES 0.30** \| *0.012"* Art.-No. |
| | 12 \| *1/2* | 10 \| *3/8* | 20 | 60 | 20,000 | 10 | **451.341** | **451.361** | **451.541** | **451.561** |
| | 12 \| *1/2* | 10 \| *3/8* | 20 | 60 | 20,000 | 10 | | **451.362*** | available on demand | available on demand |
| 3 | 12 \| *1/2* | 10 \| *3/8* | 20 | 120 | 15,000 | 10 | **458.341** | **458.361** | **458.541** | **458.561** |
| | 17 \| *5/8* | 16 \| *5/8* | 22 | 65 | 20,000 | 10 | **452.341** | **452.361** | **452.541** | **452.561** |
| | 23 \| *7/8* | 22 \| *7/8* | 25 | 68 | 18,000 | 10 | **453.341** | **453.361** | **453.541** | **453.561** |
| | 30 \| *1 1/4* | 29 \| *1 1/8* | 25 | 68 | 18,000 | 10 | **456.341** | **456.361** | **456.541** | **456.561** |
| | 50 \| *2* | 22 \| *7/8* | 18 | 68 | 18,000 | 10 | | **453.363**** | | |

## 4 End Brushes with Shank Ø 6 mm, Silicon Carbide Bristles

| D1 mm \| *inch* | D2 mm \| *inch* | H mm \| *inch* | L mm \| *inch* | RPM max. | Pack. | **SIC 120/1.1** Art.-No. | **SIC 180/1.0** Art.-No. | **SIC 320/0.6** Art.-No. |
|---|---|---|---|---|---|---|---|---|
| 12 \| *1/2* | 10 \| *3/8* | 20 \| *3/4* | 60 \| *2 3/8* | 20,000 | 10 | **451.831** | *451.851* | *451.871* |
| 17 \| *5/8* | 16 \| *5/8* | 22 \| *7/8* | 68 \| *2 3/4* | 20,000 | 10 | **452.831** | *452.851* | available on demand |
| 23 \| *7/8* | 22 \| *7/8* | 25 \| *1* | 70 \| *2 3/4* | 10,000 | 10 | *454.831* | **454.851** | **454.871** |
| 30 \| *1 1/4* | 28 \| *1* | 30 \| *1 1/4* | 75 \| *3* | 10,000 | 10 | *456.831* | **456.851** | **456.871** |

* pointed | ** spreaded

Brushes also available with plastic cover.

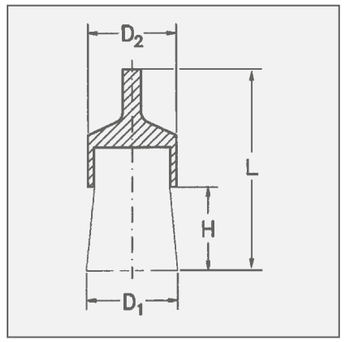


**Item Nos. in bold** are available ex stock.
Consider our minimum order value for *italic printed* article numbers (see page 139).

**STA** = steel wire, crimped
**STH** = steel wire, high tensile, crimped
**STM** = brass coated steel, crimped
**STL** = cord wire, crimped
**ROF** = stainless steel wire, crimped
**MES** = brass wire, crimped
**SIC** = silicon carbide bristles

# Knot End Brushes

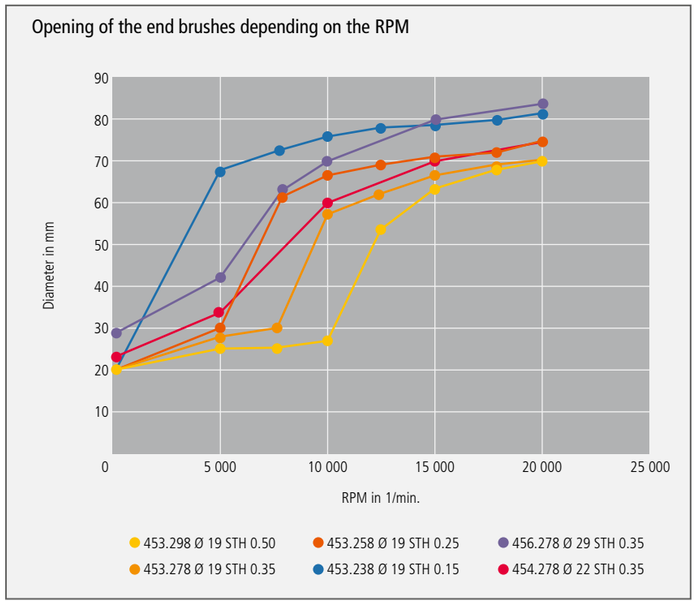


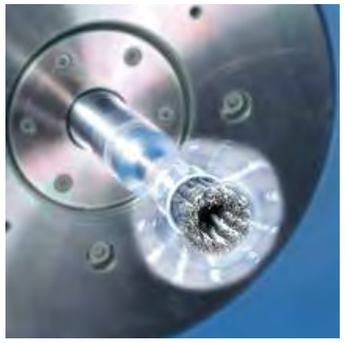

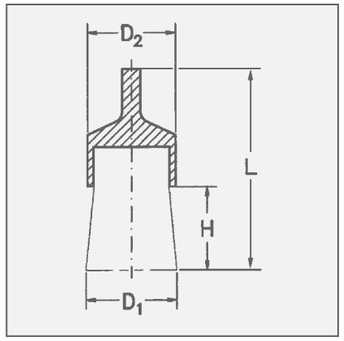


**Knotted End Brushes with Shank**
According to the RPM the brush will vary in dimension and enable the user to work in hard to reach areas such as drilled holes and recesses of all kinds.
The cups of the knot end brushes with stainless steel wire are **coated with plastic** to protect the stainless surface. Knotted end brushes with stainless steel wire are green characterized.

Further information on working on stainless steel you find at www.lessmann.com

**Special End Brushes with Shank 6 Ø, one Knot**
One-knotted End Brushes to render precise working possible.

**End Brushes, filled with epoxy resin**
End Brushes filled with epoxy resin are able to treat small, defined areas. The brushes are more aggressive and allow a precise handling, hence they are used e.g. for electrical cabinets or for treating mounting surfaces.

**Item Nos. in bold** are available ex stock.
Consider our minimum order value for *italic printed* article numbers (see page 139).

**STH** = steel wire, high tensile, straight
**STM** = brass coated steel, crimped
**RO4** = stainless steel wire, straight, 1.4401

**Knot End Brushes with Shank Ø 6 mm, Steel Wire**

| | D1/D2 mm \| *inch* | L mm \| *inch* | H mm \| *inch* | Z | RPM max. | Pack. | **STH 0.15** \| *0.006"* Art.-No. | **STH 0.25** \| *0.010"* Art.-No. | **STH 0.35** \| *0.014"* Art.-No. | **STH 0.50** \| *0.020"* Art.-No. |
|---|---|---|---|---|---|---|---|---|---|---|
| 1 | 6/10 \| *1/4/3/8* | 65 \| *2 1/2* | 25 \| *1* | 1 | 4,500 | 10 | available on demand | **451.258** | **451.278** | available on demand |
| 2 | 19 \| *3/4* | 72 \| *2 7/8* | 28 \| *1* | 6 | 20,000 | 10 | | **453.258** | **453.278** | **453.298** |
| 3 | 22 \| *7/8* | 72 \| *2 7/8* | 28 \| *1* | 8 | 20,000 | 10 | *454.238* | **454.258** | **454.278** | **454.298** |
| 4 | 29 \| *1 1/8* | 72 \| *2 7/8* | 28 \| *1* | 12 | 20,000 | 10 | available on demand | **456.258** | **456.278** | **456.298** |
| 5 | 19 \| *3/4* | 72 \| *2 7/8* | 28 \| *1* | 4 | 20,000 | 50 | available on demand | available on demand | **452.278GH*** | available on demand |

**6 Knot End Brushes with Shank Ø 6 mm, without Rose Bud, Brass Wire**

| D1/D2 mm \| *inch* | L mm \| *inch* | H mm \| *inch* | Z | RPM max. | Pack. | **STM 0.25** \| *0.010"* Art.-No. |
|---|---|---|---|---|---|---|
| 19 \| *3/4* | 72 \| *2 7/8* | 28 \| *1* | 6 | 20,000 | 10 | **453.758** |
| 22 \| *7/8* | 72 \| *2 7/8* | 28 \| *1* | 8 | 20,000 | 10 | **454.758** |
| 29 \| *1 1/8* | 72 \| *2 7/8* | 28 \| *1* | 12 | 20,000 | 10 | **456.758** |

**7 Knot End Brushes with Shank Ø 6 mm, Stainless Steel Wire**

| D1/D2 mm \| *inch* | L mm \| *inch* | H mm \| *inch* | Z | RPM max. | Pack. | **RO4 0.15** \| *0.006"* Art.-No. | **RO4 0.25** \| *0.010"* Art.-No. | **RO4 0.35** \| *0.014"* Art.-No. | **RO4 0.50** \| *0.020"* Art.-No. |
|---|---|---|---|---|---|---|---|---|---|
| 6/10 \| *1/4/3/8* | 65 \| *2 1/2* | 25 \| *1* | 1 | 4,500 | 10 | available on demand | **451.458** | **451.478** | available on demand |
| 19 \| *3/4* | 72 \| *2 7/8* | 28 \| *1* | 6 | 20,000 | 10 | **453.338** | **453.358** | **453.378** | available on demand |
| 22 \| *7/8* | 72 \| *2 7/8* | 28 \| *1* | 8 | 20,000 | 10 | *454.338* | **454.358** | **454.378** | **454.398** |
| 29 \| *1 1/8* | 72 \| *2 7/8* | 28 \| *1* | 12 | 20,000 | 10 | *456.338* | **456.358** | **456.378** | **456.398** |

* filled with epoxy resin

# Miniature Brushes

**Miniature Brushes**
Miniature Brushes are used for polishing, cleaning, or deburring of small-area surfaces or small working pieces. Miniature brushes remove waste and scale from weld seams or soldering points. The brushes are used on metal surfaces, steel, aluminum, cast iron, plastics, stone or wood.

Typical fields of applications:
- Precision tools
- Fine mechanics
- Pneumatic and hydraulics
- Electronics parts, e.g. plates

Miniature Brushes are available in different types as wheel, cup and end brushes.
The typical filling materials are steel wire, stainless steel wire, brass wire or abrasive bristles.

**Stainless Steel Brushes**
Information on working on stainless steel you find at www.lessmann.com

**Please Note:** Brushes with bristles or goat hair achieve an ideal brushing result by using polish.

**Item Nos. in bold** are available ex stock.
Consider our minimum order value for *italic printed* article numbers (see page 139).

| | |
|---|---|
| STH | = steel wire, high tensile, straight |
| ROF | = stainless steel wire, crimped |
| MES | = brass wire, crimped |
| PA | = polyamide |
| SIC | = silicon carbide bristles |
| AO | = aluminium oxide bristles |

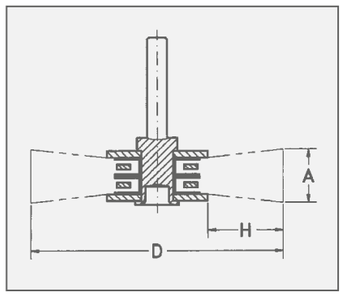


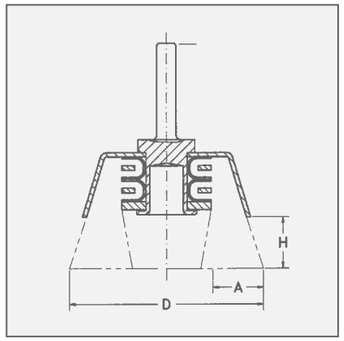


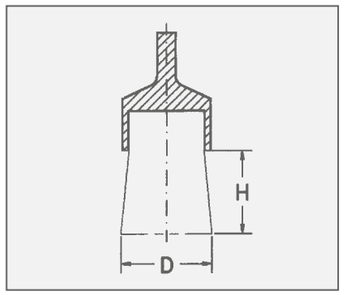




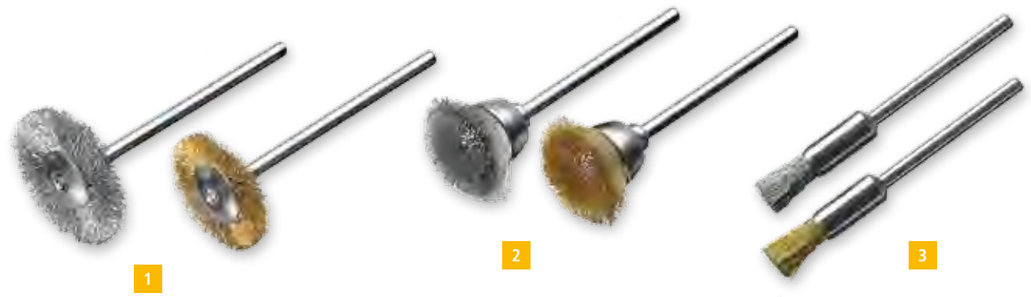


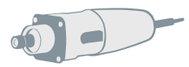

## 1 Miniature Wheel Brushes with shank Ø 3 mm

| D mm \| *inch* | A | H | RPM max. | Pack. | STH 0.10 Art.-No. | ROF 0.10 Art.-No. | MES 0.10 Art.-No. | SIC 320/0.55 Art.-No. | SIC 500/0.46 Art.-No. | SIC 800/0.25 Art.-No. | AO 320/0.50 Art.-No. |
|---|---|---|---|---|---|---|---|---|---|---|---|
| 16 \| *5/8* | 2 | 3 | 15,000 | 10 | **410.221** | **410.321** | *410.521* | *410.871* | *410.881* | *410.891* | *410.871.AO* |
| 19 \| *3/4* | 2 | 5 | 12,000 | 10 | **410.222** | **410.322** | **410.522** | *410.872* | *410.882* | *410.892* | *410.872.AO* |
| 22 \| *7/8* | 2 | 6 | 10,000 | 10 | **410.223** | **410.323** | **410.523** | *410.873* | **410.883** | *410.893* | *410.873.AO* |

| D mm \| *inch* | A | H | RPM max. | Pack. | AO 500/0.46 Art.-No. | AO 600/0.30 Art.-No. | Diamond K400 Art.-No. | PA 0.15 Art.-No. | Bristle white Art.-No. | Bristle schwarz Art.-No. | Goat hair Art.-No. |
|---|---|---|---|---|---|---|---|---|---|---|---|
| 16 \| *5/8* | 2 | 3 | 15,000 | 10 | *410.801* | *410.891.AO* | *410.811.DB* | *410.031* | *410.001.WB* | *410.001.SB* | *410.001.ZH* |
| 19 \| *3/4* | 2 | 5 | 12,000 | 10 | *410.802* | *410.892.AO* | *410.812.DB* | *410.032* | *410.002.WB* | *410.002.SB* | *410.002.ZH* |
| 22 \| *7/8* | 2 | 6 | 10,000 | 10 | *410.803* | *410.893.AO* | *410.813.DB* | *410.033* | **410.003.WB** | *410.003.SB* | **410.003.ZH** |

## 2 Miniature Cup Brushes with shank Ø 3 mm

| D mm \| *inch* | A | H | RPM max. | Pack. | STH 0.10 Art.-No. | ROF 0.10 Art.-No. | MES 0.10 Art.-No. | SIC 320/0.55 Art.-No. | SIC 500/0.46 Art.-No. | SIC 800/0.25 Art.-No. | AO 320/0.50 Art.-No. |
|---|---|---|---|---|---|---|---|---|---|---|---|
| 15 \| *5/8* | 2 | 5 | 15,000 | 10 | **430.222** | **430.322** | **430.522** | *430.872* | *430.882* | *430.092* | *430.872.AO* |
| 18 \| *3/4* | 2 | 6 | 15,000 | 10 | **430.223** | **430.323** | **430.523** | *430.873* | **430.883** | *430.893* | *430.873.AO* |

| D mm \| *inch* | A | H | RPM max. | Pack. | AO 500/0.46 Art.-No. | AO 600/0.30 Art.-No. | Diamond K400 Art.-No. | PA 0.15 Art.-No. | Bristle white Art.-No. | Bristle schwarz Art.-No. | Goat hair Art.-No. |
|---|---|---|---|---|---|---|---|---|---|---|---|
| 15 \| *5/8* | 2 | 5 | 15,000 | 10 | *430.802* | *430.892.AO* | *430.812.DB* | *430.031* | **430.001.WB** | *430.001.SB* | **430.001.ZH** |
| 18 \| *3/4* | 2 | 6 | 15,000 | 10 | *430.803* | *430.893.AO* | *430.813.DB* | *430.032* | *430.002.WB* | *430.002.SB* | *430.002.ZH* |

## 3 Miniature End Brushes with shank Ø 3 mm

| D mm \| *inch* | H | RPM max. | Pack. | STH 0.10 Art.-No. | ROF 0.10 Art.-No. | MES 0.10 Art.-No. | SIC 320/0.55 Art.-No. | SIC 500/0.46 Art.-No. | SIC 800/0.25 Art.-No. | AO 320/0.50 Art.-No. |
|---|---|---|---|---|---|---|---|---|---|---|
| 5 \| *13/64* | 8 | 15,000 | 10 | **450.221** | **450.311** | **450.521** | *450.871* | **450.881** | *450.891* | *450.871.AO* |

| D mm \| *inch* | H | RPM max. | Pack. | AO 500/0.46 Art.-No. | AO 600/0.30 Art.-No. | Diamond K400 Art.-No. | PA 0.15 Art.-No. | Bristle white Art.-No. | Bristle schwarz Art.-No. | Goat hair Art.-No. |
|---|---|---|---|---|---|---|---|---|---|---|
| 5 \| *13/64* | 8 | 15,000 | 10 | *450.801* | *450.891.AO* | *450.821.DB* | *450.031* | **450.001.WB** | *450.001.SB* | **450.001.ZH** |

All Brushes also available with shank Ø 2,34 and 3,17 mm.

LESSMANN®
THE GERMAN BRUSH COMPANY

# HAND BRUSHES AND BROOMS

# Hand Brushes

**Hand Brushes**
Hand Brushes are used everywhere, in the metal industry, construction work, in the workshop. They are found in every tool box. The complete range contains all types of filling materials, from coarse steel to the finest brass wire. The handles are made of beech wood with two hanging holes.

LESSMANN Handbrushes are of superb quality and yet are economic due to a fully automated and efficient production facility. Using modern marking systems individual printing of brands and EAN Bar Codes can be made. This is done by burning stamps or tampon printing at low cost.

**Brake Caliper Brushes ROKI**
This brush has been manufactured in co-operation with the automobile industry. This brush is used for cleaning off clogged lining deposits when changing brake pad linings. Thus the brush is very slim with a heavy straight wire filling. Made in this way it prevents damage to sensitive brake areas during use. The brush 182.431 has to the top a sloping filling and is therefore extra hard. New is the two-components-handle with the latest ergonomical aspects. Because of the design and the ergonomic handle this brush is remarkably versatile to use.

**Hand Brushes with Two-Components Handles**
apply to other requirements of modern high quality tools with best ergonomics.

**Rivet Brushes**
The V shaped filling material enables the removal of slag and scale from normally hard to reach welds and fillet welds

**Hand Brushes with Scraper**
For painters and bricklayers in the construction industry. These brushes are ideal for scraping off dirt or cement splashes.

**Hand Brushes, Heavy Duty**
These models have a larger wooden handle and a longer and dense wire filling than our standard models.

**Universal Wire Brushes**
For many uses, especially in the Do It Yourself section.

**Stainless Steel Brushes**
Information on brushing on stainless materials you will find at www.lessmann.com

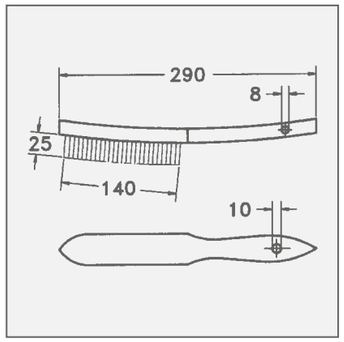

All standard hand brushes have a bar code stamp and LESSMANN-imprint.

PEFC
PEFC/04-31-0389

**We are accredited!**

# Hand Brushes Standard

EAN

**Hand Brushes**

| | Rows > | 1 | 2 | 3 | 4 | 5 | 6 |
|---|---|---|---|---|---|---|---|
| Filling | Pack. | Art.-No. | Art.-No. | Art.-No. | Art.-No. | Art.-No. | Art.-No. |
| 1 **STA** straight 0.35 \| *0.014"* | 12 | **100.011** | **100.021** | **100.031** | **100.041** | **100.051** | **100.061** |
| **STA** straight 0.35 \| *0.014"* | 100 | | **100.020** | **100.030** | **100.040** | **100.050** | |
| **STM** crimped 0.30 \| *0.012"* | 12 | | **105.421** | **105.431** | **105.441** | **105.451** | **105.461** |
| **STA** crimped 0.20 \| *0.008"* | 12 | | | **102.431** | **102.441** | | |
| **STA** crimped 0.30 \| *0.012"* | 12 | **102.611** | **102.621** | **102.631** | **102.641** | **102.651** | **102.661** |
| 2 **ROF** crimped 0.15 \| *0.006"* | 12 | | **104.321** | **104.331** | **104.341** | **104.351** | |
| **ROF** crimped 0.20 \| *0.008"* | 12 | | **104.421** | **104.431** | **104.441** | **104.451** | |
| **ROF** crimped 0.35 \| *0.012"* | 12 | **104.611** | **104.621** | **104.631** | **104.641** | **104.651** | **104.661** |
| **ROF** straight 0.35 \| *0.012"* | 12 | **103.711** | **103.721** | **103.731** | **103.741** | **103.751** | **103.761** |
| **RO8** straight 0.30 \| *0.012"* | 12 | | **105.721** | **105.731** | **105.741** | | |
| 3 **MES** crimped 0.15 \| *0.006"* | 12 | | **107.321** | **107.331** | **107.341** | **107.351** | |
| **MES** crimped 0.25 \| *0.010"* | 12 | *107.411* | **107.421** | **107.431** | **107.441** | **107.451** | **107.461** |
| **MES** crimped 0.35 \| *0.014"* | 12 | *107.611* | **107.621** | **107.631** | **107.641** | **107.651** | **107.661** |
| **MES** straight 0.35 \| *0.014"* | 12 | | **106.621** | **106.631** | **106.641** | **106.651** | |
| **BRO** crimped 0.20 \| *0.008"* | 12 | | | *108.331* | **108.341** | **108.351** | |
| **PA** straight 0.40 \| *0.016"* | 12 | | | **109.431** | **109.441** | **109.451** | |
| 4 **FIB** | 12 | | | | **109.741** | | |

Other filling materials and trim length on request.

**Item Nos. in bold** are available ex stock.
Consider our minimum order value for *italic printed* article numbers (see page 139).

| | |
|---|---|
| **STA** = steel wire | **MES** = brass wire |
| **STM** = brass coated steel | **BRO** = bronze wire |
| **ROF** = stainless steel wire | **PA** = polyamide |
| **RO8** = stainless steel wire, extremely heat resistant | **FIB** = fibre |
| | **ROS** = horse hair |

# Special Hand Brushes

1 2 3 4 6 5

## Special Hand Brushes

| | Filling | Rows | L | B | A | H | Pack. | Art.-No. |
|---|---|---|---|---|---|---|---|---|
| | **Brake Caliper Brushes with Two-Components Handles** | | mm \| *inch* | mm \| *inch* | mm \| *inch* | mm \| *inch* | | |
| 1 | **STA** straight 0.35 \| *0.014"* | 2 x 13 | 225 \| *9* | 12 \| *1/2* | 90 \| *3 1/2* | 22 \| *7/8* | 10 | **182.401** |
| | **STA** crimped 0.30 \| *0.012"* | 2 x 13 | 225 \| *9* | 12 \| *1/2* | 90 \| *3 1/2* | 22 \| *7/8* | 10 | **182.411** |
| 2 | **STA** straight 0.35 \| *0.014"* | 2 x 12/13 | 225 \| *9* | 12 \| *1/2* | 90 \| *3 1/2* | 12/18 \| *1/2/5/8* | 10 | **182.431*** |
| 3 | **ROF** straight 0.35 \| *0.014"* | 2 x 13 | 225 \| *9* | 12 \| *1/2* | 90 \| *3 1/2* | 22 \| *7/8* | 10 | **182.421** |
| 4 | **MES** crimped 0.25 \| *0.010"* | 2 x 13 | 225 \| *9* | 12 \| *1/2* | 90 \| *3 1/2* | 22 \| *7/8* | 10 | **182.451** |
| | **Hand Brushes with Plastic Handles** | | | | | | | |
| 5 | **STA** straight 0.35 \| *0.014"* | 2 | 285 \| *11 1/4* | 20 \| *3/4* | 130 \| *5 1/8* | 25 \| *1* | 10 | **185.121** |
| | **STA** straight 0.35 \| *0.014"* | 3 | 285 \| *11 1/4* | 26 \| *1* | 130 \| *5 1/8* | 25 \| *1* | 10 | **185.131** |
| | **STA** straight 0.35 \| *0.014"* | 4 | 285 \| *11 1/4* | 31 \| *1 1/4* | 130 \| *5 1/8* | 25 \| *1* | 10 | **185.141** |
| | **STA** straight 0.35 \| *0.014"* | 5 | 285 \| *11 1/4* | 31 \| *1 1/4* | 130 \| *5 1/8* | 25 \| *1* | 10 | **185.151** |
| | **ROF** crimped 0.35 \| *0.014"* | 2 | 285 \| *11 1/4* | 20 \| *3/4* | 130 \| *5 1/8* | 25 \| *1* | 10 | **185.421** |
| | **ROF** crimped 0.35 \| *0.014"* | 3 | 285 \| *11 1/4* | 26 \| *1* | 130 \| *5 1/8* | 25 \| *1* | 10 | **185.431** |
| | **ROF** crimped 0.35 \| *0.014"* | 4 | 285 \| *11 1/4* | 31 \| *1 1/4* | 130 \| *5 1/8* | 25 \| *1* | 10 | **185.441** |
| | **ROF** crimped 0.35 \| *0.014"* | 5 | 285 \| *11 1/4* | 31 \| *1 1/4* | 136 \| *5 1/8* | 25 \| *1* | 10 | **185.451** |
| | **MES** straight 0.35 \| *0.014"* | 2 | 285 \| *11 1/4* | 20 \| *3/4* | 130 \| *5 1/8* | 25 \| *1* | 10 | **185.621** |
| | **MES** straight 0.35 \| *0.014"* | 3 | 285 \| *11 1/4* | 26 \| *1* | 130 \| *5 1/8* | 25 \| *1* | 10 | **185.631** |
| | **MES** straight 0.35 \| *0.014"* | 4 | 285 \| *11 1/4* | 31 \| *1 1/4* | 130 \| *5 1/8* | 25 \| *1* | 10 | **185.641** |
| | **MES** straight 0.35 \| *0.014"* | 5 | 285 \| *11 1/4* | 31 \| *1 1/4* | 130 \| *5 1/8* | 25 \| *1* | 10 | *185.651* |
| | **Hand Brushes with Two-Components Handles** | | | | | | | |
| 6 | **ROF** straight 0.35 \| *0.014"* | 3 | 285 \| *11 1/4* | 26 \| *1* | 130 \| *5 1/8* | 25 \| *1* | 10 | **186.431** |

* Special hard brushes, pointed | For the food industry

**Brushes for the food industry**
These brushes comply to the hygiene charter of the FEIBP (European Brushware Federation) and are accredited in the food industry.

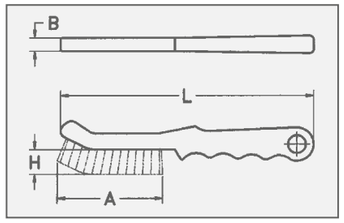




# Special Hand Brushes

1 2 3 4 5 6 7

## Special Hand Brushes

| | Filling | Rows | L | B | A | H | Pack. | Art.-No. |
|---|---|---|---|---|---|---|---|---|
| | | | mm \| *inch* | mm \| *inch* | mm \| *inch* | mm \| *inch* | | |
| EAN 1 | **Rivet Brushes** | | | | | | | |
| | **STA** straight 0.35 \| *0.014"* | 3 x 15 | 290 \| *11 3/8* | 35 \| *1 1/2* | 135 \| *5 3/8* | 35 \| *1 1/2* | 12 | **120.801** |
| | **ROF** straight 0.35 \| *0.014"* | 3 x 15 | 290 \| *11 3/8* | 35 \| *1 1/2* | 135 \| *5 3/8* | 35 \| *1 1/2* | 12 | **120.811** |
| | **RO8** straight 0.30 \| *0.012"* | 3 x 15 | 290 \| *11 3/8* | 35 \| *1 1/2* | 135 \| *5 3/8* | 35 \| *1 1/2* | 12 | **120.831** |
| | **ROF** straight 0.35 \| *0.014"* with Plastic Handles | 3 x 15 | 290 \| *11 3/8* | 31 \| *1 1/4* | 135 \| *5 3/8* | 35 \| *1 1/2* | 12 | **120.811** |
| EAN 2 | **Hand Brushes with Scraper** | | | | | | | |
| | **STA** straight 0.35 \| *0.014"* | 4 x 15 | 290 \| *11 3/8* | 33 \| *1 1/4* | 130 \| *5 1/8* | 25 \| *1* | 12 | **120.401** |
| | **STA** straight 0.35 \| *0.014"* | 6 x 15 | 290 \| *11 3/8* | 45 \| *2* | 130 \| *5 1/8* | 25 \| *1* | 12 | *120.601* |
| | **ROF** straight 0.35 \| *0.014"* | 4 x 15 | 290 \| *11 3/8* | 33 \| *1 1/4* | 130 \| *5 1/8* | 25 \| *1* | 12 | *120.412* |
| 3 | **Hand Brushes Heavy Duty** | | | | | | | |
| | **STA** straight 0.35 \| *0.014"* | 2 x 16 | 290 \| *11 3/8* | 30 \| *1 1/4* | 150 \| *6* | 32 \| *1 1/4* | 12 | **136.101** |
| | **STA** straight 0.35 \| *0.014"* | 3 x 16 | 290 \| *11 3/8* | 35 \| *1 1/2* | 150 \| *6* | 32 \| *1 1/4* | 12 | **136.102** |
| | **STA** straight 0.35 \| *0.014"* | 4 x 16 | 290 \| *11 3/8* | 40 \| *1 3/8* | 150 \| *6* | 32 \| *1 1/4* | 12 | **136.103** |
| | **Hand Brushes Export Model** | | | | | | | |
| 4 | **STA** straight 0.35 \| *0.014"* | 4 x 17 | 300 \| *12* | 30 \| *1 1/4* | 130 \| *5 1/8* | 25 \| *1* | 12 | **122.401** |
| 5 | **STA** straight 0.35 \| *0.014"* | 4 x 19 | 350 \| *14* | 30 \| *1 1/4* | 160 \| *6 3/8* | 30 \| *1 1/4* | 6 | **122.801** |
| 6 | **BRO** straight 0.30 \| *0.012"* | 4 x 19 | 350 \| *14* | 30 \| *1 1/4* | 150 \| *6* | 30 \| *1 1/4* | 6 | **122.821** |
| 7 | **Universal Wire Brushes** | | | | | | | |
| | **STM** crimped 0.30 \| *0.012"* | 1 | 260 \| *10 1/4* | 10 \| *3/8* | 135 \| *5 3/8* | 28 \| *1* | 24 | **056.001** |
| | **STA** crimped 0.35 \| *0.014"* | 1 | 260 \| *10 1/4* | 10 \| *3/8* | 135 \| *5 3/8* | 28 \| *1* | 24 | **056.301** |
| | **ROF** crimped 0.30 \| *0.012"* | 1 | 260 \| *10 1/4* | 10 \| *3/8* | 135 \| *5 3/8* | 28 \| *1* | 24 | **056.501** |
| | **MES** crimped 0.30 \| *0.012"* | 1 | 260 \| *10 1/4* | 10 \| *3/8* | 135 \| *5 3/8* | 28 \| *1* | 24 | **056.701** |

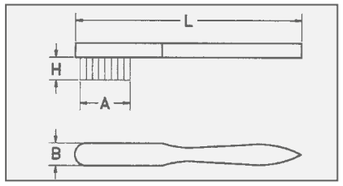


**Item Nos. in bold** are available ex stock.
Consider our minimum order value for *italic printed* article numbers (see page 139).

| | |
|---|---|
| **STA** | = steel wire |
| **STM** | = brass coated steel |
| **ROF** | = stainless steel wire |
| **RO8** | = stainless steel wire, extremely heat resistant |
| **MES** | = brass wire |
| **BRO** | = bronze wire |

# Spark Plug Brushes

1 2 3 4 5 6 7

**Standard Spark Plug Brushes**

| | Filling | Rows | L mm \| *inch* | B mm \| *inch* | A mm \| *inch* | H mm \| *inch* | Pack. | Art.-No. |
|---|---|---|---|---|---|---|---|---|
| EAN 1 | **MES** crimped 0.15 \| *0.006"* | 3 x 5/6 | 150 \| *6* | 15 \| *5/8* | 40 \| *1 3/8* | 15 \| *5/8* | 12 | **125.211** |
| EAN | **STA** crimped 0.15 \| *0.006"* | 3 x 5/6 | 150 \| *6* | 15 \| *5/8* | 40 \| *1 3/8* | 15 \| *5/8* | 12 | **125.201** |
| EAN | **ROF** crimped 0.15 \| *0.006"* | 3 x 5/6 | 150 \| *6* | 15 \| *5/8* | 40 \| *1 3/8* | 15 \| *5/8* | 12 | **125.231** |
| EAN | **MES** crimped 0.15 \| *0.006"* / PP | 3 x 5/6 | 150 \| *6* | 15 \| *5/8* | 40 \| *1 3/8* | 15 \| *5/8* | 12 | **125.221** |
| EAN | **MES** crimped 0.15 \| *0.006"* | 3 x 5/6 | 150 \| *6* | 15 \| *5/8* | 40 \| *1 3/8* | 15 \| *5/8* | 12 | **125.311*** |
| EAN | **ROF** crimped 0.20 \| *0.008"* | 3 x 5/6 | 150 \| *6* | 15 \| *5/8* | 40 \| *1 3/8* | 15 \| *5/8* | 12 | **125.241** |
| EAN | **PA** straight 0.30 \| *0.012"* | 3 x 5/6 | 150 \| *6* | 15 \| *5/8* | 40 \| *1 3/8* | 15 \| *5/8* | 12 | **125.251** |
| 2 | **BRO** crimped 0.15 \| *0.006"* | 3 x 5/6 | 200 \| *8* | 15 \| *5/8* | 40 \| *1 3/8* | 15 \| *5/8* | 12 | **132.801** |
| | **Small Spark Plug Brushes** | | | | | | | |
| 3 | **MES** crimped 0.15 \| *0.006"* | 2 x 5 | 100 \| *4* | 15 \| *5/8* | 25 \| *1* | 15 \| *5/8* | 12 | **125.111** |
| 4 | **MES** crimped 0.15 \| *0.006"* | 2 x 4 | 100 \| *4* | 12 \| *1/2* | 22 \| *7/8* | 12 \| *1/2* | 12 | **182.001**** |
| | **Large Spark Plug Brushes** | | | | | | | |
| | **MES** crimped 0.15 \| *0.006"* | 5 x 8/10 | 190 \| *1 1/2* | 24 \| *1* | 55 \| *2 1/4* | 18 \| *3/4* | 12 | **125.511** |
| 5 | **MES** crimped 0.15 \| *0.006"* / PP | 5 x 8/10 | 190 \| *1 1/2* | 24 \| *1* | 55 \| *2 1/4* | 12 \| *1/2* | 12 | **125.521** |
| 6 | **MES** crimped 0.15 \| *0.006"* | 4 x 6 | 155 \| *6* | 22 \| *7/8* | 40 \| *1 3/8* | 18 \| *3/4* | 12 | **182.331**** |
| | **Soldering tip brush, extra dense filament, wooden handle orange coated** | | | | | | | |
| EAN 7 | **ROF** crimped 0.10 \| *0.004"* | 3 x 7/8 | 150 \| *6* | 15 \| *5/8* | 39 \| *1 3/8* | 8 | 12 | **125.234** |

* Wooden body varnished | ** Plastic body

**Spark Plug Brushes**
These small brushes are for all fine brushwork requiring thin wire.
They are available in different sizes and filling marterials. The models 182.001 and 182.331 have plastic bodies, the other models have a beech wood body.
The body of 125.311 is varnished.

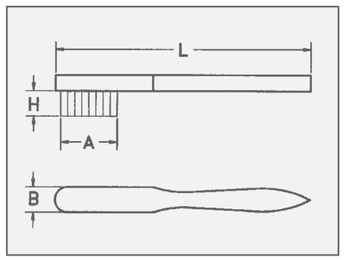


**Item Nos. in bold** are available ex stock.
Consider our minimum order value for *italic printed* article numbers (see page 139).

| | |
|---|---|
| STA | = steel wire |
| ROF | = stainless steel wire |
| MES | = brass wire |
| BRO | = bronze wire |
| PA | = polyamide |
| ROS | = horse hair |



# Fine Scratch Brushes

1 2 3 4 5 6 7 8 9

**Fine Scratch Brushes**

| | Filling | Rows | L mm \| *inch* | B mm \| *inch* | A mm \| *inch* | H mm \| *inch* | Pack. | Art.-No. |
|---|---|---|---|---|---|---|---|---|
| 1 | **MES** crimped 0.15 \| *0.006"* | 3 | 225 \| *9* | 16 \| *5/8* | 110 \| *4 3/8* | 20 \| *3/4* | 12 | **126.311** |
| 1 | **MES** crimped 0.15 \| *0.006"* | 4 | 225 \| *9* | 20 \| *3/4* | 110 \| *4 3/8* | 20 \| *3/4* | 12 | **126.411** |
| 1 | **MES** crimped 0.15 \| *0.006"* | 5 | 225 \| *9* | 24 \| *1* | 110 \| *4 3/8* | 20 \| *3/4* | 12 | **126.511** |
| 1 | **MES** crimped 0.15 \| *0.006"* | 6 | 225 \| *9* | 28 \| *1* | 110 \| *4 3/8* | 20 \| *3/4* | 12 | **126.611** |
| 1 | **MES** crimped 0.15 \| *0.006"* | 8 | 225 \| *9* | 36 \| *1 1/2* | 110 \| *4 3/8* | 20 \| *3/4* | 12 | *126.811* |
| 1 | **MES** crimped 0.08 \| *0.003"* | 4 | 225 \| *9* | 20 \| *3/4* | 110 \| *4 3/8* | 20 \| *3/4* | 12 | **126.441** |
| 1 | **MES** crimped 0.10 \| *0.004"* | 4 | 225 \| *9* | 20 \| *3/4* | 110 \| *4 3/8* | 20 \| *3/4* | 12 | **126.431** |
| 1 | **MES** crimped 0.15 \| *0.006"* | 4 | 225 \| *9* | 20 \| *3/4* | 100 \| *4* | 20 \| *3/4* | 12 | **182.162**** |
| | **ROF** crimped 0.15 \| *0.006"* | 4 | 225 \| *9* | 20 \| *3/4* | 110 \| *4 3/8* | 20 \| *3/4* | 12 | **126.481** |
| 9 | **ROF** crimped 0.15 \| *0.006"* | 4 | 225 \| *9* | 20 \| *3/4* | 100 \| *4* | 20 \| *3/4* | 12 | **182.152**** |
| 2 | **STA** crimped 0.15 \| *0.006"* | 4 | 225 \| *9* | 20 \| *3/4* | 110 \| *4 3/8* | 20 \| *3/4* | 12 | **126.401** |
| 3 | **PA** straight 0.30 \| *0.012"* | 4 | 225 \| *9* | 20 \| *3/4* | 110 \| *4 3/8* | 20 \| *3/4* | 12 | **126.451** |
| | **PA** straight 0.30 \| *0.012"* | 4 | 225 \| *9* | 20 \| *3/4* | 100 \| *4 3/8* | 20 \| *3/4* | 12 | **182.172**** |
| 4 | **ROS** | 4 | 225 \| *9* | 20 \| *3/4* | 110 \| *4 3/8* | 20 \| *3/4* | 12 | **126.472** |
| | **Special Brushes** | | | | | | | |
| 6 | **MES** crimped 0.35 \| *0.014"* | 4 x 11/12 | 350 \| *14* | 22 \| *7/8* | 80 \| *3* | 10 \| *3/8* | 12 | **137.701** |
| 7 | **MES** crimped 0.30 \| *0.012"* | 5 x 9 | 700 \| *27 1/2* | 25 \| *1* | 54 \| *2 1/4* | 6 \| *1/4* | 12 | **138.704** |
| | **MES** crimped 0.30 \| *0.012"* | 4 x 11/12 | 450 \| *17 3/4* | 22 \| *7/8* | 80 \| *3* | 8 \| *5/16* | 12 | **138.705** |
| 5 | **MES** crimped 0.35 \| *0.014"* | 4 x 11/12 | 350 \| *14* | 22 \| *7/8* | 77 \| *3* | 10 \| *3/8* | 12 | **182.807**** |
| 5 | **MES** crimped 0.35 \| *0.014"* | 4 x 11/12 | 400 \| *15 3/4* | 20 \| *3/4* | 77 \| *3* | 10 \| *3/8* | 12 | **183.704**** |
| 5 | **MES** crimped 0.35 \| *0.014"* | 4 x 11/12 | 450 \| *17 3/4* | 22 \| *7/8* | 77 \| *3* | 10 \| *3/8* | 12 | *182.811*** |
| 5 | **MES** crimped 0.30 \| *0.012"* | 5 x 9/8 | 700 \| *27 1/2* | 25 \| *1* | 54 \| *2 1/4* | 6 \| *1/4* | 12 | *183.706*** |
| 8 | **MES** crimped 0.25 \| *0.010"* | 2 x 10 | 200 \| *8* | 15 \| *5/8* | 80 \| *3* | 19 \| *3/4* | 12 | **132.701** |

** Plastic body | For the food industry

**Fine Scratch Brushes**
Also called watchmaker and goldsmith brushes. The brushes have a very high density of filling wires and are available in different widths. These brushes are used among other things to apply solvents and other cleansing agents.

**Special Brushes**
The brushes were manufactured according to our customers' specification and show variations, which are possible through our flexible manufacturing procedures.

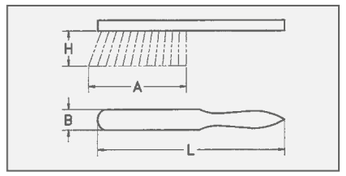

# Special Models

**Hand Brushes Rectangular and Violin**
There are many filling wires in these stable universal brushes.

**Hand Brushes with Bracket**
The wooden body is pointed to the front end, the plastic bracket is nailed on. The model 140.901 has an adjustable stock board which enables an adjustment to brush firmness.

These special models are mainly ordered by our export customers.

**Brushes for removing wet storage stain**
Zinc coated surfaces are needed for corrosion protection. Often after the zinc coating of work parts, under wet conditions chemical reactions occur which cause wet storage stain. The special bronze wire allows the effective removal of white rust without smashing the zinc coating which has to be treated.

**Radiator Brushes**
This narrow, long shaped brush is ideal for hard to reach areas on heaters and radiators. The model 121.211 has a straight body, the other models have a curved body.

**Staining Brushes**
The treated wood is prepared with these staining brushes. By using fibre and bronze wire the brushes are insensitive against all normal
chemical based solutions. The model 144.211 has an adjustable stock board which enables an adjustment to brush firmness.
With the staining brushes 144.701 and 144.801 the surface after the staining process is polished by the leather insert strips. Any standing wood fibre is also smoothed.

**File Cleaners**
The brushes for cleaning wood and metal files are available in different sizes and with different file card. The file card is glued on to the wooden body.

**File Card in Rolls**
Various roughing-up tools can be manufactured with this material, which is also available in different sizes and filling materials. Available in meters or if required in single pieces.

**Bricklayer's Brushes**
For pre and retreatment of brickwork for painters and bricklayers. All models have a jute or plastic strap.

**Plasterer's Brushes**
These are for roughening and structuring of plaster. Body is made of beech wood, the steel pins are hardened. Model 061.111: the outer steel pins are obliquely arranged in order to reach into corners.

**Spiked Rollers**
For use before the removal of wallpaper. The spiked roller perforates the paper allowing absorption of stripping solvent. The roller is of plastic with the steel pins obliquely arranged to ensure maximum efficiency in use. The handle can be made longer with customised telescopic handles. For safety the roller is supplied with a protective cover.

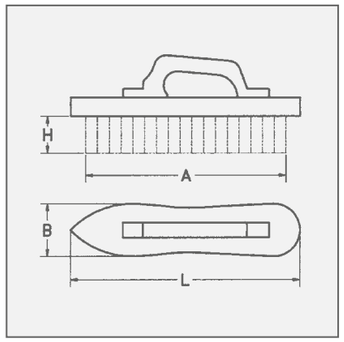


**Item Nos. in bold** are available ex stock.
Consider our minimum order value for *italic printed* article numbers (see page 139).

| | |
|---|---|
| STA | = steel wire |
| STM | = brass coated steel |
| BRO | = bronze wire |

PEFC
PEFC/04-31-0389

**We are accredited!**

**Special Hand Brushes**

| | Filling | Rows | L | B | A | H | Pack. | Art.-No. |
|---|---|---|---|---|---|---|---|---|
| | **Hand Brushes Rectangular and Violin** | | mm \| *inch* | mm \| *inch* | mm \| *inch* | mm \| *inch* | | |
| 1 | **STA** straight 0.35 \| *0.014"* | 6 x 19 | 185 \| *7 1/4* | 57 \| *2 1/4* | 175 \| *7* | 30 \| *1 1/4* | 12 | **140.201** |
| 2 | **STA** straight 0.35 \| *0.014"* | 5 | 200 \| *8* | 60 \| *2 3/8* | 190 \| *7 1/2* | 35 \| *1 1/2* | 16 | **141.231** |
| 3 | **STM** straight 0.35 \| *0.014"* | 5 | 200 \| *8* | 55 \| *2 1/4* | 170 \| *6 5/8* | 40 \| *1 3/8* | 36 | *140.641* |
| | **Hand Brushes with Bracket** | | | | | | | |
| 4 | **STA** straight ca. 0.35 \| *0.014"* | 5 | 225 \| *9* | 55 \| *2 1/4* | 200 \| *8* | 38 \| *1 1/2* | 16 | **140.901*** |
| 5 | **STM** crimped 0.35 \| *0.014"* | 5 | 225 \| *9* | 55 \| *2 1/4* | 200 \| *8* | 38 \| *1 1/2* | 16 | **140.811** |
| | **Hand Brushes with Strap** | | | | | | | |
| 6 | **STA** straight 0.50 \| *0.020"* | 7 | 200 \| *8* | 70 \| *2 3/4* | 185 \| *7 1/4* | 35 \| *1 1/2* | 12 | **141.421** |
| | **Hand Brushes for removing wet storage stain** | | | | | | | |
| 7 | **BRO** crimped 0.08 \| *0.003"* | 11 x 18 | 120 \| *4 3/4* | 70 \| *2 3/4* | 110 \| *4 3/8* | 14 \| *4/7* | 4 | **152.811** |

* with adjustable board

# Special Models

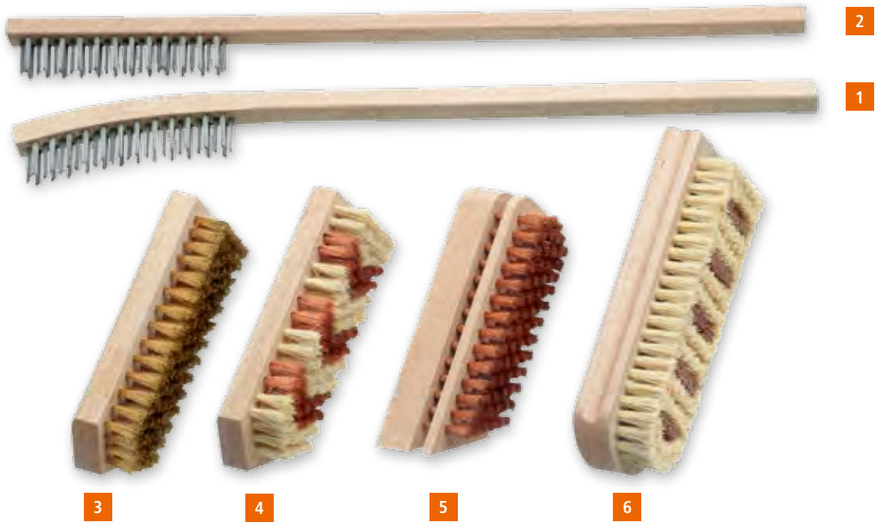


## Radiator Brushes

| | Filling | Rows | L mm \| *inch* | B mm \| *inch* | A mm \| *inch* | H mm \| *inch* | Pack. | Art.-No. |
|---|---|---|---|---|---|---|---|---|
| 1 | **STA** straight 0.25 \| *0.010"* | 3 x 13 | 420 \| *16 1/2* | 20 \| *3/4* | 115 \| *4 1/2* | 20 \| *3/4* | 12 | **121.111*** |
| 2 | **STA** straight 0.25 \| *0.010"* | 3 x 13 | 420 \| *16 1/2* | 20 \| *3/4* | 115 \| *4 1/2* | 20 \| *3/4* | 12 | **121.211**** |

## Staining Brushes

| | Filling | Rows | L mm \| *inch* | B mm \| *inch* | A mm \| *inch* | H mm \| *inch* | Pack. | Art.-No. |
|---|---|---|---|---|---|---|---|---|
| 3 | **MES** crimped 0.15 \| *0.006"* | 7 | 150 \| *6* | 50 \| *2* | 140 \| *5 1/2* | 20 \| *3/4* | 12 | **144.001** |
| | **BRO** crimped 0.15 \| *0.006"* | 7 | 150 \| *6* | 50 \| *2* | 140 \| *5 1/2* | 20 \| *3/4* | 12 | **144.011** |
| 4 | **BRO** 0.15 \| *0.006"* / **FIB** | 7 | 150 \| *6* | 50 \| *2* | 140 \| *5 1/2* | 20 \| *3/4* | 12 | **144.021** |
| | **BRO** crimped 0.15 \| *0.006"* | 7 | 180 \| *7* | 60 \| *2 3/8* | 170 \| *6 5/8* | 20 \| *3/4* | 12 | **144.111** |
| | **BRO** 0.15 \| *0.006"* / **FIB** | 7 | 180 \| *7* | 60 \| *2 3/8* | 170 \| *6 5/8* | 20 \| *3/4* | 12 | **144.121** |
| 5 | **BRO** crimped 0.15 \| *0.006"* | 6 | 150 \| *6* | 50 \| *2* | 130 \| *5 1/8* | 20 \| *3/4* | 12 | **144.211***** |
| | **BRO** crimped 0.15 \| *0.006"* | 6 | 150 \| *6* | 50 \| *2* | 130 \| *5 1/8* | 15 \| *5/8* | 12 | **144.311** |
| | **BRO** crimped 0.15 \| *0.006"* | 6 | 180 \| *7* | 60 \| *2 3/8* | 160 \| *6 3/8* | 15 \| *5/8* | 12 | **144.411** |
| 6 | **Leather + FIB** | 3/7 | 175 \| *6 7/8* | 60 \| *2 3/8* | 160 \| *6 3/8* | 20 \| *3/4* | 12 | **144.701** |
| | **Leather + FIB** | 4/9 | 203 \| *8* | 72 \| *2 7/8* | 190 \| *7 1/2* | 20 \| *3/4* | 12 | **144.801** |

* Wooden body curved | ** Wooden body straight | *** with adjustable board

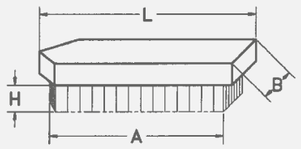


**Item Nos. in bold** are available ex stock.
Consider our minimum order value for *italic printed* article numbers (see page 139).

| | |
|---|---|
| STA | = steel wire |
| ROF | = stainless steel wire |
| MES | = brass wire |
| BRO | = bronze wire |
| PP | = polypropylene |
| FIB | = fibre |

to page 87

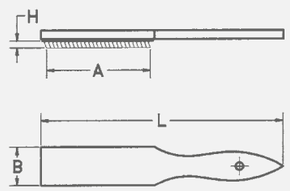

## Roughering Brushes

| | File Cards | L mm \| *inch* | B mm \| *inch* | A mm \| *inch* | Pack. | Art.-No. |
|---|---|---|---|---|---|---|
| 1 | **STA** 0.30 \| *0.012"* | 210 \| *8 1/4* | 25 \| *1* | 100 \| *4* | 12 | **037.101** |
| | **STA** 0.30 \| *0.012"* | 250 \| *10* | 40 \| *1 3/8* | 115 \| *4 1/2* | 12 | **037.201** |
| | **STA** 0.30 \| *0.012"* | 250 \| *10* | 40 \| *1 3/8* | 115 \| *4 1/2* | 100 | **037.200** |
| | **ROF** 0.30 \| *0.012"* | 250 \| *10* | 40 \| *1 3/8* | 115 \| *4 1/2* | 12 | **037.221** |
| 2 | **ROF** 0.60 | 170 \| *6 3/4* | 30 \| *1 1/4* | 24 \| *1* | 20 | **037.710** |

## 3 File Cards

| Filling, without interval | STA 0,30 width 25 Art.-No. | STA 0,30 width 38 Art.-No. | STA 0,30 width 51 Art.-No. | ROF 0,30 width 38 Art.-No. |
|---|---|---|---|---|
| | **000.311*** | **000.321*** | **000.331*** | **000.323*** |

## Bricklayer's Brushes with Strap

| | Filling | Rows | L mm \| *inch* | B mm \| *inch* | A mm \| *inch* | H mm \| *inch* | Pack. | Art.-No. |
|---|---|---|---|---|---|---|---|---|
| 4 | **STA** straight 0.25 \| *0.010"* | 9 | 210 \| *8 1/4* | 100 \| *4* | 200 \| *8* | 35 \| *1 1/2* | 12 | **142.101** |
| 5 | **MES** crimped 0.20 \| *0.008"* / **PP** | 9 | 210 \| *8 1/4* | 95 \| *3 3/4* | 200 \| *8* | 20 \| *3/4* | 12 | **142.211**** |

## Plasterer's Brushes

| | Filling | L mm \| *inch* | B mm \| *inch* | A mm \| *inch* | H mm \| *inch* | Pack. | Art.-No. |
|---|---|---|---|---|---|---|---|
| 6 | 86 steel Pins hardend | 190 \| *7 1/2* | 97 \| *3 3/4* | 165 \| *6 1/2* | 16 \| *5/8* | 12 | **061.101** |

## 7 Spiked Rollers

| Filling | Rows | L mm \| *inch* | B mm \| *inch* | A mm \| *inch* | H mm \| *inch* | Pack. | Art.-No. |
|---|---|---|---|---|---|---|---|
| steel Pins on plastic roller, with Protective Cover | 12 | 290 \| *11 3/8* | 25 \| *1* | 148 \| *5 7/8* | 7 \| *1/4* | 10 | **064.050** |

* Please indicate length. | ** Wooden body varnished

# Brooms and Scrubs

**Brooms and Scrubs**
Brooms and Scrubs for the use in all industrial companies and craftsman's establishments.

The shown brooms and scrubs are the best selling models. All models have a handle hole. The tree-trunk scrubs 148.601 is half-rounded for use in the forestry and sawmill area.

The brooms with flat steel wire 1.80 x 0.45 mm make the so called broom lines on cement floors thus receiving a rough surface.

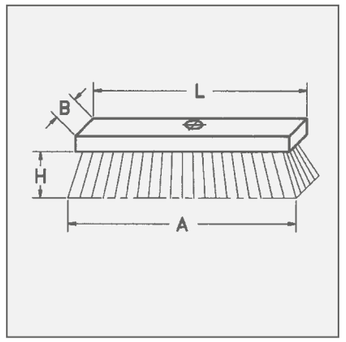


**Item Nos. in bold** are available ex stock.
Consider our minimum order value for *italic printed* article numbers (see page 139).

**STA** = steel wire
**ROF** = stainless steel wire
**MES** = brass wire

PEFC
PEFC/04-31-0389

**We are accredited!**

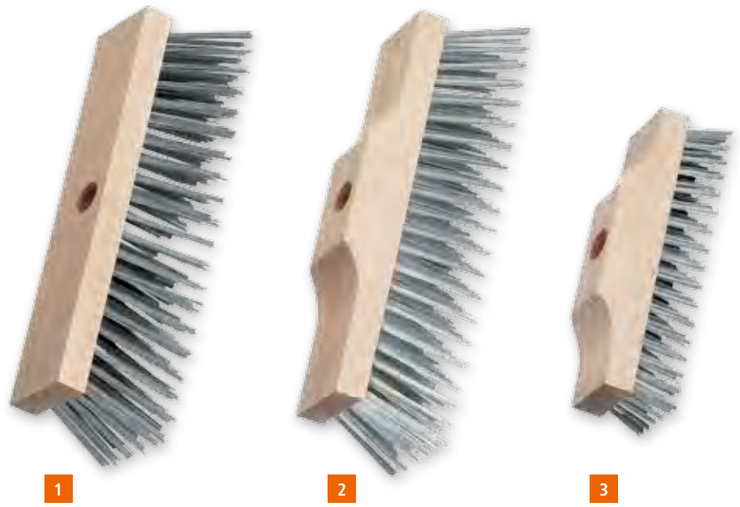


## 1 Brooms Flat Wooden Stock, with Handle Hole 23 Ø

| Filling | Rows | L mm \| *inch* | B mm \| *inch* | A mm \| *inch* | H mm \| *inch* | Pack. | Art.-No. |
|---|---|---|---|---|---|---|---|
| **STA** straight 0.50 \| *0.020"* | 5 x 16/17 | 250 \| *10* | 60 \| *2 3/8* | 270 \| *10 5/8* | 70 \| *2 3/4* | 12 | **147.101** |
| **STA** straight 0.50 \| *0.020"* | 5 x 20 | 300 \| *12* | 60 \| *2 3/8* | 330 \| *13* | 70 \| *2 3/4* | 12 | **147.401** |
| **STA** straight 0.50 \| *0.020"* | 6 x 20/21 | 300 \| *12* | 70 \| *2 3/4* | 330 \| *13* | 70 \| *2 3/4* | 12 | **147.201** |
| **STA** straight 0.50 \| *0.020"* | 6 x 20/21 | 300 \| *12* | 70 \| *2 3/4* | 330 \| *13* | 70 \| *2 3/4* | 42 | **147.200** |
| **ROF** straight 0.50 \| *0.020"* | 6 x 20 | 300 \| *12* | 70 \| *2 3/4* | 330 \| *13* | 70 \| *2 3/4* | 12 | **147.261** |
| **STA** straight 0.50 \| *0.020"* | 6 x 23 | 350 \| *14* | 70 \| *2 3/4* | 390 \| *15 3/8* | 70 \| *2 3/4* | 12 | **147.301** |

## 2 Brooms Raised Wooden Stock, with Handle Hole 23 Ø

| Filling | Rows | L mm \| *inch* | B mm \| *inch* | A mm \| *inch* | H mm \| *inch* | Pack. | Art.-No. |
|---|---|---|---|---|---|---|---|
| **STA** straight 0.50 \| *0.020"* | 5 x 16/17 | 250 \| *8 1/4* | 60 \| *2 3/8* | 270 \| *10 5/8* | 70 \| *2 3/4* | 12 | **146.101** |
| **STA** straight 0.50 \| *0.020"* | 6 x 20/21 | 300 \| *12* | 70 \| *2 3/4* | 330 \| *13* | 70 \| *2 3/4* | 12 | **146.201** |
| **STA** flach 1.80 x 0.45 | 6 x 20/21 | 300 \| *12* | 70 \| *2 3/4* | 330 \| *13* | 70 \| *2 3/4* | 12 | **146.241** |
| **STA** straight 0.50 \| *0.020"* | 6 x 23/24 | 350 \| *14* | 70 \| *2 3/4* | 390 \| *15 3/8* | 70 \| *2 3/4* | 12 | **146.301** |
| **STA** flat 1.80 x 0.45 | 6 x 23/24 | 350 \| *14* | 70 \| *2 3/4* | 390 \| *15 3/8* | 70 \| *2 3/4* | 12 | **146.341** |

## 3 Scrubs, with Handle Hole 23 Ø

| Filling | Rows | L mm \| *inch* | B mm \| *inch* | A mm \| *inch* | H mm \| *inch* | Pack. | Art.-No. |
|---|---|---|---|---|---|---|---|
| **STA** straight 0.35 \| *0.014"* | 6 x 16/17 | 220 \| *8 5/8* | 60 \| *2 3/8* | 225 \| *9* | 35 \| *1 1/2* | 12 | **148.101** |
| **ROF** straight 0.35 \| *0.014"* | 6 x 16/17 | 220 \| *8 5/8* | 60 \| *2 3/8* | 225 \| *9* | 35 \| *1 1/2* | 12 | **148.161** |
| **MES** crimped 0.25 \| *0.010"* | 6 x 16/17 | 220 \| *8 5/8* | 60 \| *2 3/8* | 225 \| *9* | 25 \| *1* | 12 | **148.141** |
| **STA** straight 0.25 \| *0.010"* | 6 x 17/18 | 240 \| *9 1/2* | 70 \| *2 3/4* | 245 \| *9 5/8* | 35 \| *1 1/2* | 12 | **148.201** |
| **STA** straight 0.40 \| *0.016"* | 7 x 15/16 | 230 \| *9* | 65 \| *2 1/2* | 220 \| *8 5/8* | 35 \| *1 1/2* | 12 | **148.601*** |

* Wooden body curved

# Dusters

**Dusters**
Depending on the surrounding and application area, dusters are available in various models and with various filling materials. For coarse and light adherent dirt, dusters with wire filament are ideal.

Next to horse hair we offer dusters with coco filament as a good value alternative.

The duster with polyprophylene filament (straight plastic fibre) can be cleaned easily and therefore other surfaces do not get dirty. Since the water absorption of polypropylene is very low, the duster can be used also under wet conditions.

Further models in special execution with different filling materials and trim length available.

**Dusters custom-made**
Beside the mentioned models we provide special models with filling material and trim length according to your requirements.

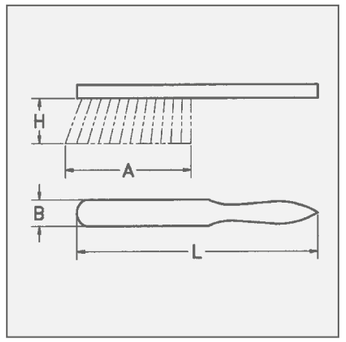


**Item Nos. in bold** are available ex stock.
Consider our minimum order value for *italic printed* article numbers (see page 139).

| | |
|---|---|
| STA | = steel wire |
| MES | = brass wire |
| PP | = polyprophylene |
| ROS | = horse hair |

PEFC/04-31-0389

**We are accredited!**

**Dusters**

| | | Filling | Rows | L mm \| *inch* | B mm \| *inch* | A mm \| *inch* | H mm \| *inch* | Pack. | Art.-No. |
|---|---|---|---|---|---|---|---|---|---|
| | 3 | **STA** straight 0.25 \| *0.010"* | 4 | 320 \| *12 1/2* | 35 \| *1 1/2* | 150 \| *6* | 60 \| *2 3/8* | 12 | **124.101** |
| | 2 | **MES** crimped 0.25 \| *0.010"* | 4 | 320 \| *12 1/2* | 35 \| *1 1/2* | 150 \| *6* | 40 \| *1 3/8* | 12 | **124.121** |
| | 1 | **coco** | 4 | 280 \| *11* | 40 \| *1 3/8* | 160 \| *6 3/8* | 70 \| *2 3/4* | 12 | **124.201** |
| | 4 | **coco** | 4 | 430 \| *17* | 40 \| *1 3/8* | 165 \| *6 1/2* | 70 \| *2 3/4* | 20 | **124.401** |
| | 5 | **ROS** | 6 | 300 \| *12* | 43 \| *1 3/4* | 165 \| *6 1/2* | 50 \| *2* | 20 | **124.301*** |
| EAN | 6 | **PP** | 4 | 320 \| *12 1/2* | 35 \| *1 1/2* | 175 \| *6 7/8* | 70 \| *2 3/4* | 12 | **124.801** |

* Wooden body varnished

# Weed Brushes and Weed Brooms

**Weed Brush**
This brush with V shaped filling material is ideal for the removal of moss and weeds in joints and edges on pavements, courtyards or cobbled areas.

Due to the long handle an ergonomic and effective working is possible. Without stooping, your back is preserved, though it is possible to remove weeds aggressively and precisely.

The brush with set filling material allows a cleaning of edges and joints which are hard to reach.

**Weed Broom**
As well as the weed brush, the weed broom is a brush for outdoors.
Ideally moss and weeds can be removed from terrace boards or cobblestones. An easy and clean working without stooping makes the brush to an effective broom with depth effects. High quality, with brass coated steel wires guarantee a long lifetime of the brush in the well known Lessmann quality „Made in Germany".

All standard hand brushes have a bar code stamp and LESSMANN-imprint.

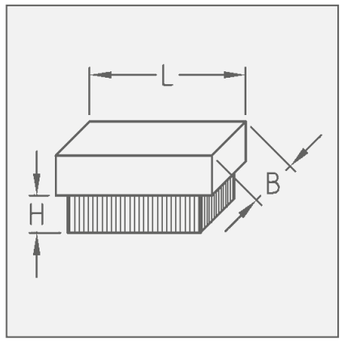

Displaybox

**Item Nos. in bold** are available ex stock.
Consider our minimum order value for *italic printed* article numbers (see page 139).

STA = steel wire
STM = brass coated steel

EAN

**Weed Brushes, with Handle Hole 23 Ø**

| | Filling | L | B | H | Rows | Pack. | Art.-No. |
|---|---|---|---|---|---|---|---|
| | **without handle** | mm \| *inch* | mm \| *inch* | mm \| *inch* | | | |
| 1 | **STA** 0.35 \| *0.014"* | 100 \| *4* | 35 \| *1 1/2* | 36 \| *1 1/2* | 3 | 25 | **151.108** |
| 2 | **STM** 0.35 \| *0.014"* Filling set in working direction | 100 \| *4* | 35 \| *1 1/2* | 36 \| *1 1/2* | 3 | 25 | **151.511** |
| 3 | **STA** 0.35 \| *0.014"* with scraper | 100 \| *4* | 35 \| *1 1/2* | 42 \| *1 5/8* | 3 | 25 | **151.109** |
| | **with handle, 1400 mm long, Ø 28 mm, incl. Displaybox** | | | | | | |
| 4 | **STA** 0.35 \| *0.014"* | 100 \| *4* | 35 \| *1 1/2* | 36 \| *1 1/2* | 3 | 30 | *151.991.07** |
| | **STM** 0.35 \| *0.014"* Filling set in working direction | 100 \| *4* | 35 \| *1 1/2* | 36 \| *1 1/2* | 3 | 30 | *151.995.07** |

EAN

**Weed Broom, with Handle Hole 23 Ø**

| | Filling | L | B | H | Rows | Pack. | Art.-No. |
|---|---|---|---|---|---|---|---|
| | **without handle** | mm \| *inch* | mm \| *inch* | mm \| *inch* | | | |
| 5 | **STM** 0.50 \| *0.020"* | 140 \| *5 1/2* | 60 \| *2 3/8* | 70/60 \| *2 3/4 / 2 3/8* | 10/9 | 16 | **152.510** |
| | **with handle, 1400 mm long, Ø 28 mm, incl. Displaybox** | | | | | | |
| | **STM** 0.50 \| *0.020"* | 140 \| *5 1/2* | 60 \| *2 3/8* | 70/60 \| *2 3/4 / 2 3/8* | 10/9 | 12 | **152.995.07*** |

* Delivery only in full packaging units.

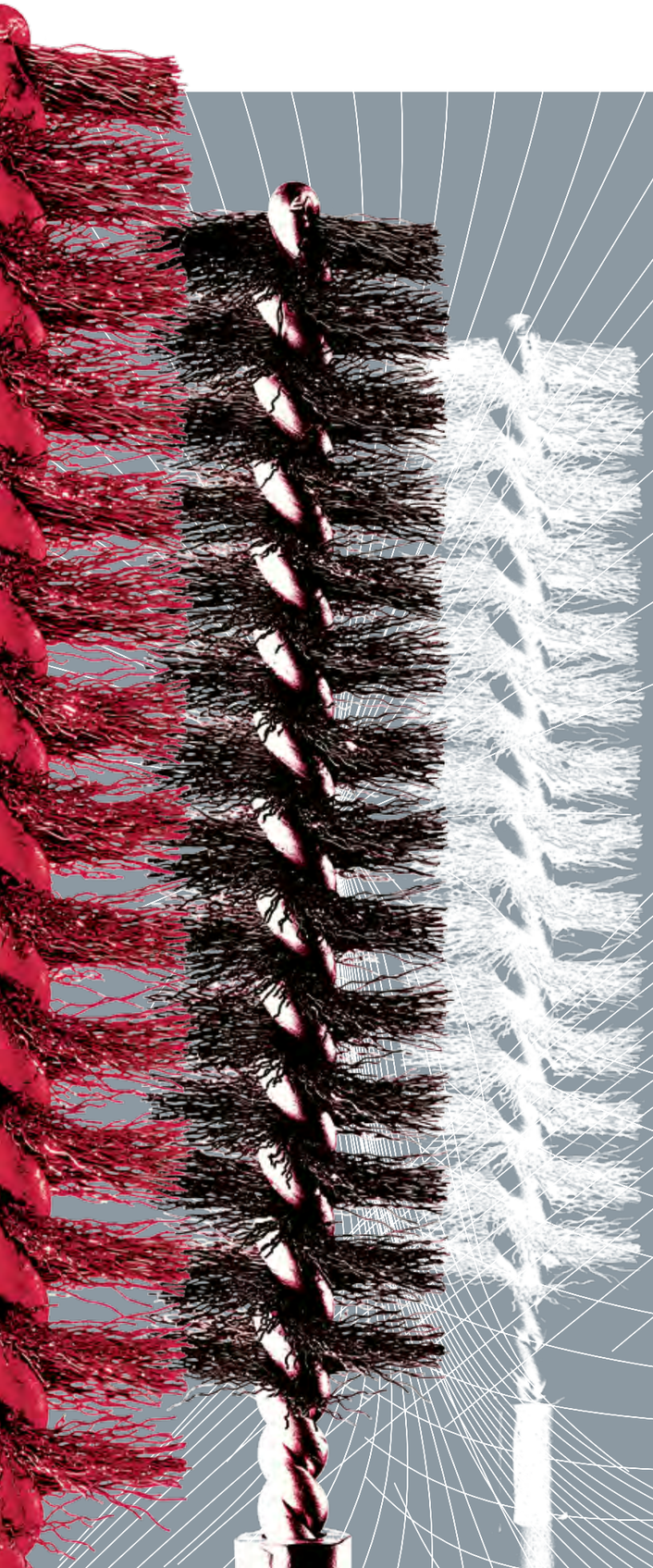

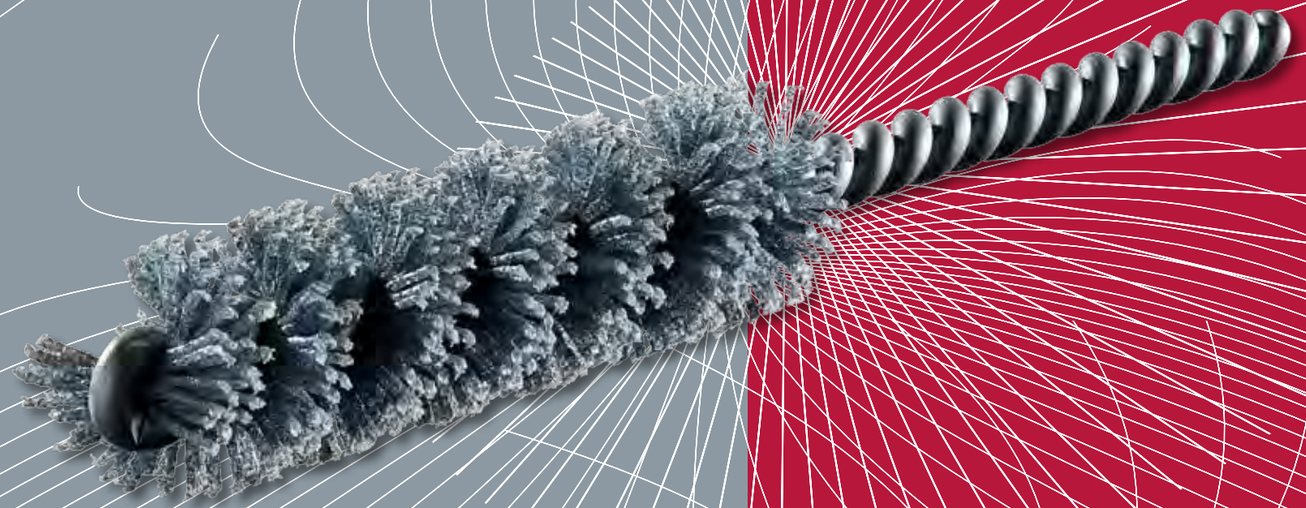

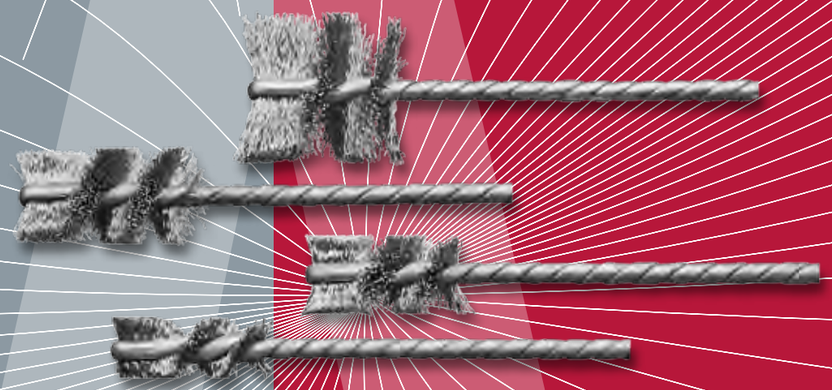

# Micro Interior Brushes

**Interior brushes with zinc coated twisted wire and single spiral**
Due to the filling of aluminium oxide or silicon carbide their usage is more flexible than with conventional interior brushes.

Interior brushes with abrasive filaments are usually used for deburring bores, cross bores, o-ring recesses and for polishing and cleaning small bores.

Due to the flexible surface of the bristles the interior brushes suit to the contour of the bore and areas which are hard to reach can be treated. Abrasive bristles also have grinding effects on the side. That allows a rounding of the edges also on cross bores.

Also brushes with **diamond** filling are available, that causes an even more aggressive surface of the brush.

**Micro Interior Brushes, Steel Wire**
Micro interior brushes with steel wire are used as thread brushes for descaling, deburring or cleaning:
- Cross corners
- Crossovers
- Tap holes
- Slots

The brushes can be used either manually or mechanically.

Please do not hesitate to contact us, we will also find for special applications a compatible solution. Due to a fully automated production, LESSMANN offers high quality to reasonable prices.

**Mechanical Application**
Only use the brush with the indicated maximal peripheral speed (RPM max.). The max. RPM only is allowed when the brush is clamped min. for 10 mm into the tool. When the brush is inserted into the suitable work piece, higher RPMs are possible. Only use the brush right rotating.

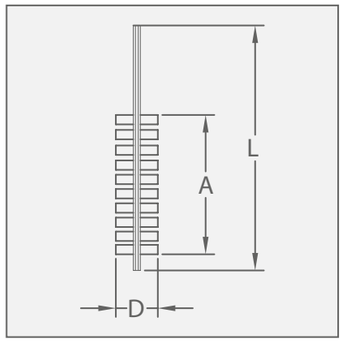


**Item Nos. in bold** are available ex stock.
Consider our minimum order value for *italic printed* article numbers (see page 139).

**AO** = aluminium oxide bristles

**Stainless Steel Brushes**
Information on working on stainless steel you find at www.lessmann.com

Mikro Interior Brushes are also available with special contours, e.g. **layered cut.**

Please ask for our special leaflet „Interior Brushes".



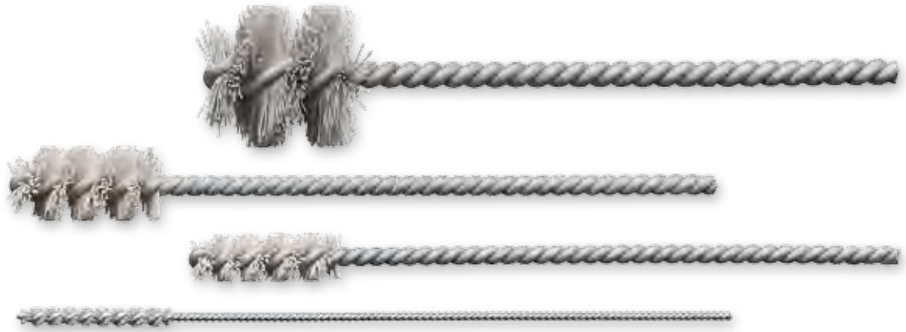

**Microabrasive Interior Brushes IBE, Aluminum Oxide Bristles**

| D mm \| *inch* | L mm \| *inch* | A mm \| *inch* | Shank Ø mm \| *inch* | RPM max. | Pack. | AO 600/0.30 Art.-No. | AO 1000/0.25 Art.-No. |
|---|---|---|---|---|---|---|---|
| 3.2 \| *1/8* | 125 \| *5* | 25 \| *1* | 1.5 \| *9/16* | 800 | 10 | **541.084** | *540.067* |
| 4.2 \| *5/32* | 125 \| *5* | 25 \| *1* | 2.2 \| *1/12* | 1,000 | 10 | **541.045** | *540.068* |
| 4.8 \| *3/16* | 125 \| *5* | 25 \| *1* | 2.2 \| *1/12* | 1,000 | 10 | **541.083** | *540.069* |
| 5.5 \| *7/32* | 125 \| *5* | 25 \| *1* | 2.2 \| *1/12* | 1,000 | 10 | **541.079** | *540.070* |
| 6.6 \| *1/4* | 125 \| *5* | 25 \| *1* | 2.5 \| *1/10* | 1,000 | 10 | **541.037** | *540.071* |
| 8.2 \| *5/16* | 125 \| *5* | 25 \| *1* | 3.2 \| *1/8* | 2,000 | 10 | **541.076** | *540.072* |
| 9.8 \| *3/8* | 125 \| *5* | 25 \| *1* | 3.2 \| *1/8* | 2,000 | 10 | **541.077** | *540.073* |
| 11.5 \| *7/16* | 125 \| *5* | 25 \| *1* | 3.7 \| *1/7* | 2,000 | 10 | **541.085** | *540.074* |
| 13 \| *1/2* | 125 \| *5* | 25 \| *1* | 3.7 \| *1/7* | 2,000 | 10 | **541.087** | *540.075* |
| 17.5 \| *11/16* | 125 \| *5* | 25 \| *1* | 4.7 \| *3/16* | 2,000 | 10 | **541.039** | |
| 16 \| *5/8* | 125 \| *5* | 25 \| *1* | 3.7 \| *1/7* | 2,000 | 10 | **541.089** | *540.076* |
| 20 \| *3/4* | 125 \| *5* | 25 \| *1* | 4.7 \| *3/16* | 2,000 | 10 | **541.093** | *540.077* |
| 25 \| *1* | 125 \| *5* | 25 \| *1* | 4.7 \| *3/16* | 2,000 | 10 | **541.095** | *540.078* |

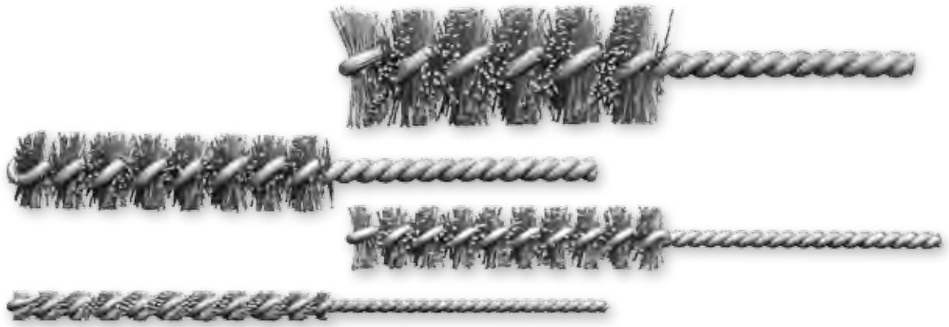

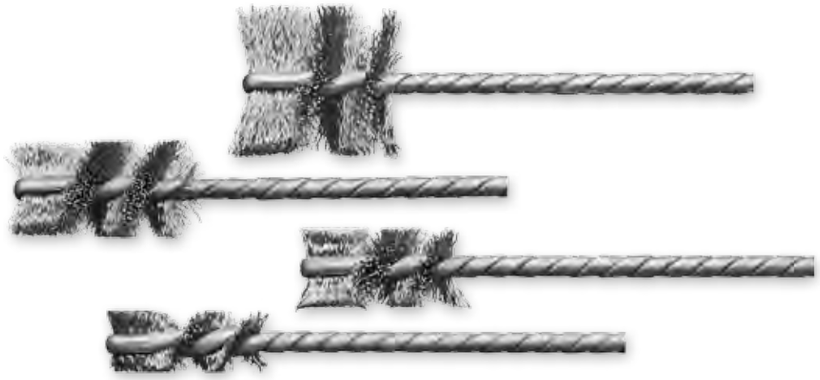

**Microabrasive Interior Brushes IBE, Silicon Carbide Bristles**

| D mm \| *inch* | L mm \| *inch* | A mm \| *inch* | Shank Ø mm \| *inch* | RPM max. | Pack. | **SIC 120/0.6** Art.-No. | **SIC 320/0.6** Art.-No. | **SIC 1000/0.25** Art.-No. |
|---|---|---|---|---|---|---|---|---|
| 1.2 \| *3/64* | 100 \| *4* | 12 \| *1/2* | 0.7 \| *1/32* | 500 | 10 | | | **545.200.12*** |
| 1.9 \| *9/128* | 100 \| *4* | 18 \| *5/8* | 0.7 \| *1/32* | 500 | 10 | | | **545.200.19** |
| *2.2* \| *5/64* | 100 \| *4* | 18 \| *5/8* | 0.9 \| | 1,000 | 10 | | | **545.200.22** |
| 2.6 \| *7/64* | 100 \| *4* | 25 \| *1* | 1.0 \| *3/64* | 1,000 | 10 | | | **545.200.26** |
| 3.2 \| *1/8* | 100 \| *4* | 25 \| *1* | 1.7 \| *1/16* | 1,000 | 10 | | | **545.200.32** |
| 4.2 \| *5/32* | 125 \| *5* | 25 \| *1* | 2.2 \| *1/12* | 1,000 | 10 | | | **545.200.42** |
| 5.5 \| *7/32* | 125 \| *5* | 25 \| *1* | 2.2 \| *1/12* | 1,000 | 10 | | | *545.200.55* |
| 6 \| *1/4* | 125 \| *5* | 65 \| *2 1/2* | 3.0 \| *1/8* | 1,500 | 10 | **541.200.60** | **543.200.60** | *545.200.60* |
| 8 \| *5/16* | 125 \| *5* | 65 \| *2 1/2* | 3.0 \| *1/8* | 1,500 | 10 | **541.200.80** | **543.200.80** | *545.200.80* |
| 10 \| *3/8* | 125 \| *5* | 65 \| *2 1/2* | 3.7 \| *1/7* | 2,000 | 10 | **541.201.00** | **543.201.00** | *545.201.00* |
| 13 \| *1/2* | 125 \| *5* | 65 \| *2 1/2* | 3.7 \| *1/7* | 2,000 | 10 | **541.201.30** | **543.201.30** | *545.201.30* |
| 16 \| *3/8* | 125 \| *5* | 65 \| *2 1/2* | 5.2 \| *1/5* | 2,000 | 10 | **541.201.60** | **543.201.60** | *545.201.60* |
| 19 \| *3/4* | 125 \| *5* | 65 \| *2 1/2* | 5.2 \| *1/5* | 2,000 | 10 | **541.201.90** | **543.201.90** | *545.201.90* |
| 20 \| *3/4* | 125 \| *5* | 65 \| *2 1/2* | 5.7 \| *7/32* | 2,000 | 10 | **541.202.00** | | |
| 22 \| *7/8* | 125 \| *5* | 65 \| *2 1/2* | 5.7 \| *7/32* | 2,000 | 10 | **541.202.20** | **543.202.20** | *545.202.20* |
| 25 \| *1* | 125 \| *5* | 65 \| *2 1/2* | 5.7 \| *7/32* | 2,000 | 10 | **541.202.50** | **543.202.50** | *545.202.50* |
| 28 \| *1* | 125 \| *5* | 65 \| *2 1/2* | 5.7 \| *7/32* | 2,000 | 10 | **541.202.80** | **543.202.80** | *545.202.80* |
| 30 \| *1 1/4* | 125 \| *5* | 65 \| *2 1/2* | 5.7 \| *7/32* | 2,000 | 10 | **541.203.00** | **543.203.00** | *545.203.00* |
| 32 \| *1 1/4* | 125 \| *5* | 65 \| *2 1/2* | 5.7 \| *7/32* | 2,000 | 10 | **541.203.20** | *543.203.20* | *545.203.20* |
| 38 \| *1 1/2* | 125 \| *5* | 65 \| *2 1/2* | 5.7 \| *7/32* | 2,000 | 10 | **541.203.80** | | |

* Type IB: with straight / clipped off point

**Micro Interior Brushes IBH, Steel Wire, Stainless Steel Wire**

| D mm \| *inch* | L mm \| *inch* | A mm \| *inch* | Shank Ø mm \| *inch* | RPM max. | Pack. | **STH 0.12** \| *0.005"* Art.-No. | **STH 0.20** \| *0.008"* Art.-No. | **ROH 0.12** \| *0.005"* Art.-No. | **ROH 0.20** \| *0.008"* Art.-No. |
|---|---|---|---|---|---|---|---|---|---|
| 6 \| *1/4* | 90 \| *3 1/2* | 25 \| *1* | 3.2 \| *1/8* | 3,500 | 10 | **564.220.60** | | | |
| 8 \| *5/16* | 90 \| *3 1/2* | 25 \| *1* | 3.2 \| *1/8* | 3,500 | 10 | **564.220.80** | | | |
| 10 \| *3/8* | 90 \| *3 1/2* | 25 \| *1* | 3.8 \| *5/32* | 3,500 | 10 | **565.321.00** | **565.341.00** | **565.521.00** | |
| 13 \| *1/2* | 90 \| *3 1/2* | 25 \| *1* | 3.8 \| *5/32* | 3,500 | 10 | **565.321.30** | **565.341.30** | **565.521.30** | |
| 16 \| *5/8* | 90 \| *3 1/2* | 25 \| *1* | 3.8 \| *5/32* | 3,000 | 10 | **565.321.60** | **565.341.60** | **565.521.60** | *565.541.60* |
| 19 \| *3/4* | 90 \| *3 1/2* | 25 \| *1* | 3.8 \| *5/32* | 3,000 | 10 | **565.321.90** | **565.341.90** | *565.521.90* | *565.541.90* |
| 20 \| *3/4* | 90 \| *3 1/2* | 25 \| *1* | 3.8 \| *5/32* | 3,000 | 10 | | *565.432.00* | | |
| 21 \| *53/64* | 90 \| *3 1/2* | 25 \| *1* | 3.8 \| *5/32* | 3,000 | 10 | *565.322.10* | *565.342.10* | | |
| 24 \| *1* | 90 \| *3 1/2* | 25 \| *1* | 3.8 \| *5/32* | 3,000 | 10 | *565.322.40* | | | |
| 25 \| *1* | 90 \| *3 1/2* | 25 \| *1* | 3.8 \| *5/32* | 3,000 | 10 | **565.322.50** | **565.342.50** | 565.522.50 | **565.542.50** |
| 29 \| *1 1/8* | 90 \| *3 1/2* | 25 \| *1* | 3.8 \| *5/32* | 3,000 | 10 | *565.322.90* | *565.342.90* | | *565.542.90* |
| 32 \| *1 1/4* | 90 \| *3 1/2* | 25 \| *1* | 3.8 \| *5/32* | 3,000 | 10 | *565.323.20* | *565.343.20* | | *565.543.20* |

**Mechanical Application**
Only use the brush with the indicated maximal peripheral speed (RPM max.). The max. RPM only is allowed when the brush is clamped min. for 10 mm into the tool. When the brush is inserted into the suitable work piece, higher RPMs are possible. Only use the brush right rotating.

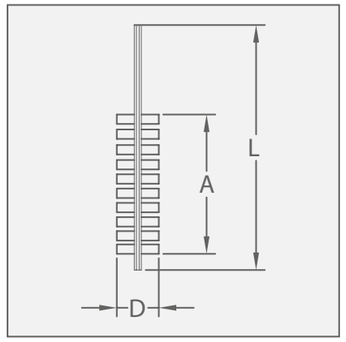


**Item Nos. in bold** are available ex stock.
Consider our minimum order value for *italic printed* article numbers (see page 139).

**STH** = steel wire, high tensile, straight
**ROH** = stainless steel wire, high tensile
**SIC** = silicon carbide bristles

# Cylinder Brushes

**Cylinder Brushes**
For manual cleaning and deburring of tubes, bores etc. Cylinder brushes are also available in other dimensions and materials. When ordering special sizes please mention full specification: total length, filling length, filling material, diameter and quantity.

**Cylinder brushes, flat filament**
These flat brushes with fine, crimped steel wire are ideal for cleaning areas which are hard to reach. A typical application is removing isolation rests in channels of stators or electric motors.

**Stainless Steel Brushes**
Information on working on stainless steel you find at www.lessmann.com

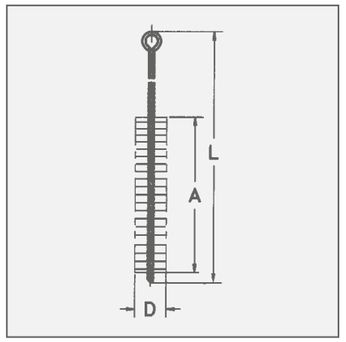


**Item Nos. in bold** are available ex stock.
Consider our minimum order value for *italic printed* article numbers (see page 139).

**STA** = steel wire
**ROF** = stainless steel wire
**MES** = brass wire
**PA** = polyamide

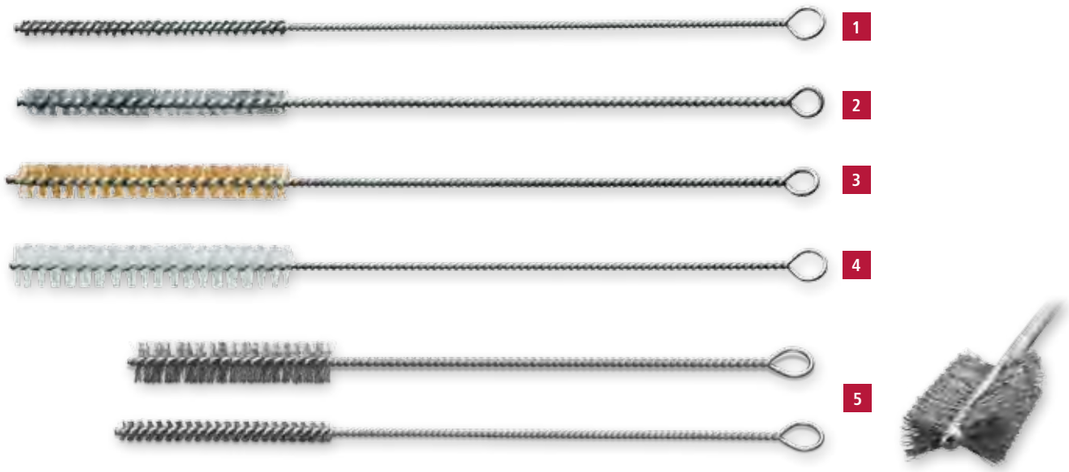


INTERIOR BRUSHES

**Cylinder Brushes with Loop IBZ**

| D mm \| *inch* | L mm \| *inch* | A mm \| *inch* | Pack. | 1 STA Art.-No. | 2 ROF Art.-No. | 3 MES Art.-No. | 4 PA Art.-No. |
|---|---|---|---|---|---|---|---|
| 3 \| *1/8* | 300 \| *12* | 100 \| *4* | 10 | **542.381** | **542.541** | **542.741** | **542.881** |
| 4 \| *1/8* | 300 \| *12* | 100 \| *4* | 10 | **542.351** | **542.508** | **542.740** | **542.823** |
| 5 \| *1/8* | 300 \| *12* | 100 \| *4* | 10 | **542.347** | **542.538** | **542.739** | **542.822** |
| 6 \| *1/4* | 300 \| *12* | 100 \| *4* | 10 | **542.301** | **542.501** | **542.701** | **542.801** |
| 8 \| *5/16* | 300 \| *12* | 100 \| *4* | 10 | **542.302** | **542.502** | **542.702** | **542.802** |
| 10 \| *3/8* | 300 \| *12* | 100 \| *4* | 10 | **542.303** | **542.503** | **542.703** | **542.803** |
| 12 \| *3/8* | 300 \| *12* | 100 \| *4* | 10 | **542.304** | **542.504** | **542.704** | **542.804** |
| 13 \| *1/2* | 300 \| *12* | 100 \| *4* | 10 | **542.305** | available on demand | **542.705** | available on demand |
| 14 \| *1/2* | 300 \| *12* | 100 \| *4* | 10 | **542.306** | *542.506* | **542.706** | **542.812** |
| 15 \| *5/8* | 300 \| *12* | 100 \| *4* | 10 | **542.307** | **542.507** | **542.707** | **542.807** |
| 18 \| *5/8* | 300 \| *12* | 100 \| *4* | 10 | **542.309** | available on demand | **542.709** | **542.818** |
| 20 \| *3/4* | 300 \| *12* | 100 \| *4* | 10 | **542.311** | **542.511** | **542.711** | **542.811** |
| 25 \| *1* | 300 \| *12* | 100 \| *4* | 10 | **542.313** | **542.513** | **542.713** | **542.813** |
| 30 \| *1* | 300 \| *12* | 100 \| *4* | 10 | **542.315** | **542.515** | **542.715** | **542.815** |
| 40 \| *1 3/8* | 300 \| *12* | 100 \| *4* | 10 | **542.319** | *542.519* | **542.719** | **542.819** |
| 50 \| *2* | 300 \| *12* | 100 \| *4* | 10 | **542.320** | *542.520* | **542.720** | **542.820** |

**5 Cylinder brushes, flat filament with Loop IBZ**

| D mm \| *inch* | L mm \| *inch* | A mm \| *inch* | Pack. | STA 0,15 Art.-No. | STA 0,20 Art.-No. |
|---|---|---|---|---|---|
| 13 \| *1/2* | 350 \| *14* | 10 \| *4* | 10 | **559.810** | |
| 20 \| *3/4* | 350 \| *14* | 10 \| *4* | 10 | **559.806** | |
| 26 \| *1* | 350 \| *14* | 10 \| *4* | 10 | | **559.802** |
| 32 \| *1 1/4* | 350 \| *14* | 10 \| *4* | 10 | | **559.803** |
| 38 \| *1 1/2* | 350 \| *14* | 10 \| *4* | 10 | | **559.804** |
| | 350 \| *14* | 10 \| *4* | 10 | | **559.805** |
| | 350 \| *14* | 10 \| *4* | 10 | | **559.807** |

# Hole Cleaning Brushes

**Hole cleaning Brushes with Wooden Handle IBM**

| | D mm \| *inch* | L mm \| *inch* | A mm \| *inch* | Pack. | 1 STA Art.-No. | 2 ROF Art.-No. | 3 MES Art.-No. |
|---|---|---|---|---|---|---|---|
| | 10 \| *3/8* | 300 \| *12* | 100 \| *4* | 10 | **560.310** | **560.510** | **560.710** |
| | 15 \| *5/8* | 300 \| *12* | 100 \| *4* | 10 | **560.315** | **560.515** | **560.715** |
| | 20 \| *3/4* | 300 \| *12* | 100 \| *4* | 10 | **560.320** | **560.520** | **560.720** |
| | 25 \| *1* | 300 \| *12* | 100 \| *4* | 10 | **560.325** | **560.525** | **560.725** |
| | 30 \| *1 1/4* | 300 \| *12* | 100 \| *4* | 10 | **560.330** | **560.530** | **560.730** |
| 4 | 10/18 \| *3/8 / 5/8* | 200 \| *8* | 70 \| *2 3/4* | 10 | **561.304*** | | |

* conical filling

**5 Cylinder Brushes with Shank 8 mm Ø IBG**

| D mm \| *inch* | L mm \| *inch* | A mm \| *inch* | RPM max. | Pack. | STA Art.-No. |
|---|---|---|---|---|---|
| 13 \| *1/2* | 200 \| *8* | 55 \| *2 1/4* | 1,000 | 10 | **503.311** |
| 20 \| *3/4* | 200 \| *8* | 55 \| *2 1/4* | 1,000 | 10 | **503.313** |
| 26 \| *1* | 200 \| *8* | 55 \| *2 1/4* | 800 | 10 | **503.314** |
| 32 \| *1 1/4* | 200 \| *8* | 55 \| *2 1/4* | 800 | 10 | **503.316** |
| 38 \| *1 1/2* | 200 \| *8* | 55 \| *2 1/4* | 800 | 10 | **503.318** |

**Hole Cleaning Brushes**
Those hole cleaning brushes have a wooden handle. Hence the brushes allow a very comfortable working in various application fields.

Typically the brushes are used in construction industry or handcraft business for cleaning bore holes or slots.

Besides, Hole Cleaning Brushes are ideal for cleaning threads or deburring cross holes.

The model 561.304 has the filling material conically cut.

**Mechanical Application**
Only use the brush with the indicated maximal peripheral speed (RPM max.). The max. RPM only is allowed when the brush is clamped min. for 10 mm into the tool. When the brush is inserted into the suitable work piece, higher RPMs are possible. Only use the brush right rotating.



# Bore Hole Cleaning Brushes

**Interior Brushes for bore hole cleaning IBE, Steel, without Thread**

| D mm \| *inch* | L mm \| *inch* | A mm \| *inch* | Suitable for bore hole mm \| *inch* | RPM max. | Pack. | STA 0.10 \| *0.004"* Art.-No. | STA 0.15 \| *0.006"* Art.-No. | STA 0.20 \| *0.008"* Art.-No. |
|---|---|---|---|---|---|---|---|---|
| 12 \| *1/2* | 130 \| *5 1/8* | 80 \| *3* | 10 \| *3/8* | 1,500 | 10 | **504.301** | | |
| 14 \| *1/2* | 140 \| *5 1/2* | 80 \| *3* | 12 \| *1/2* | 1,500 | 10 | **504.302** | | |
| 16 \| *5/8* | 180 \| *7* | 80 \| *3* | 14 \| *1/2* | 800 | 10 | | **504.333** | |
| 20 \| *3/4* | 200 \| *8* | 100 \| *4* | 18 \| *5/8* | 800 | 10 | | **504.334** | |
| 24 \| *1* | 220 \| *8 5/8* | 100 \| *4* | 22 \| *7/8* | 800 | 10 | | **504.335** | |
| 26 \| *1* | 250 \| *10* | 100 \| *4* | 24 \| *1* | 500 | 10 | | | **504.346** |
| 28 \| *1* | 290 \| *11 3/8* | 100 \| *4* | 26 \| *1* | 500 | 10 | | | **504.347** |

**Bore Hole Cleaning Brushes IBG, Stainless Steel, with Thread**

| D mm \| *inch* | L mm \| *inch* | A mm \| *inch* | Suitable for bore hole mm \| *inch* | Thread | Pack. | ROF 0.10 \| *0.004"* Art.-No. | ROF 0.15 \| *0.006"* Art.-No. | ROF 0.20 \| *0.008"* Art.-No. |
|---|---|---|---|---|---|---|---|---|
| 12 \| *1/2* | 130 \| *5 1/8* | 80 \| *3* | 10 \| *3/8* | M 6 | 10 | **504.501.06** | | |
| 14 \| *1/2* | 140 \| *5 1/2* | 80 \| *3* | 12 \| *1/2* | M 6 | 10 | **504.502.06** | | |
| 16 \| *5/8* | 180 \| *7* | 80 \| *3* | 14 \| *1/2* | M 6 | 10 | | **504.533.06** | |
| 20 \| *3/4* | 200 \| *8* | 100 \| *4* | 18 \| *5/8* | M 6 | 10 | | **504.534.06** | |
| 24 \| *1* | 220 \| *8 5/8* | 100 \| *4* | 22 \| *7/8* | M 6 | 10 | | *504.535.06* | |
| 26 \| *1* | 250 \| *10* | 100 \| *4* | 24 \| *1* | M 6 | 10 | | | *504.546.06* |
| 28 \| *1* | 290 \| *11 3/8* | 100 \| *4* | 26 \| *1* | M 6 | 10 | | | *504.547.06* |

**Bore Hole Cleaning Brushes**
These interior brushes are used in the mounting techniques. The brushes are ideal for cleaning bore holes in most different materials. Afterwards screws and anchors can be inserted easily in the bore hole.

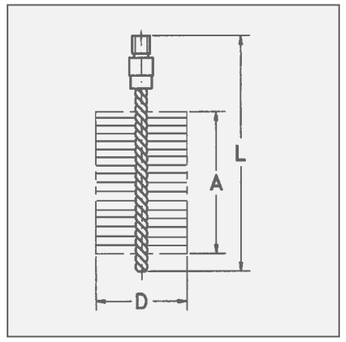


**Item Nos. in bold** are available ex stock.
Consider our minimum order value for *italic printed* article numbers (see page 139).

**STA** = steel wire
**ROF** = stainless steel wire
**MES** = brass wire

# Tube and Sleeve Brushes

**Interior Brushes**
These brushes are varied for many different uses: not only for cleaning of tubes, gratings, sleeves and cylinders. Interior brushes regulate current velocity in tubing systems. They are similar to the double spiral tube brushes for deburring cross drillings etc. On these pages are shown standard brushes, single spiral having two drilling wires and the double spiral having four.

**Sleeve Brushes**
Sleeve brushes have a double spiral and are particularly stable types of tube brushes whose trimming is cut to a conical point. Used in machines they are beneficial for cleaning the sleeves (internal threads) of containers, e.g. after galvanisation.

**Recommendation for users:** When using twisted brushes on machines please use only in a clockwise running direction. Failure to do so may cause the brush wire to open up.

**Brushes with doublespiral**
Brushes with a double spiral are mainly used for the treatment of larger diameters or for the treatment of hard materials. A double spiral is more stable and has a higher resistance against untwisting. Hence the brushes can be exposed to higher loads.

**Stainless Steel Brushes**
Information on working on stainless steel you find at www.lessmann.com

**Special diameters**
Minimum order € 125.00
Extra charge: Gross per piece
10 - 49 pcs + 50 %
50 - 99 pcs + 25 %
100 pcs and more + 10 %

Special threads under reserve
Extra charge: Gross per piece
10 - 19 pcs + € 5.00
20 - 49 pcs + € 4.00
50 - 99 pcs + € 3.00
100 pcs and more + € 2.00

For all brushes with thread M 6, M 10, W 1/2" and W 3/8" a practical hanger assembly is available for presenting the brushes individually. More information you find on the pages 120 and 123.

**Suitable thread adapter,**
see on page 113
**Handles and Extension Pieces**
see on page 113

On request tube brushes are also available with other measurements, other filling materials or other threads.

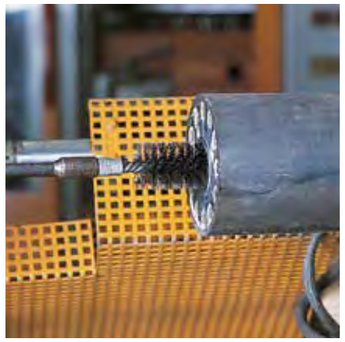

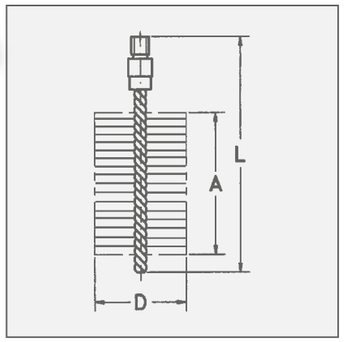


**Item Nos. in bold** are available ex stock.
Consider our minimum order value for *italic printed* article numbers (see page 139).

| | |
|---|---|
| STA | = steel wire |
| ROF | = stainless steel wire |
| MES | = brass wire |
| PA | = polyamide |
| SIC | = silicon carbide bristles |

INTERIOR BRUSHES

**Tube Brushes with external Thread IBG**

| D | L | A | Thread | Pack. | 1 STA crimped Art.-No. | 1 ROF crimped Art.-No. | 2 MES crimped Art.-No. | 3 PA straight Art.-No. |
|---|---|---|---|---|---|---|---|---|
| **Single Spirale** | | | | | | | | |
| mm \| *inch* | mm \| *inch* | mm \| *inch* | | | | | | |
| 6 \| *1/4* | 120 \| *4 3/4* | 80 \| *3* | M 4 | 10 | **501.301** | **501.501** | **501.701** | **501.801** |
| 8 \| *5/16* | 120 \| *4 3/4* | 80 \| *3* | M 6 | 10 | **500.308** | **500.508** | **500.708** | **500.808** |
| 10 \| *3/8* | 115 \| *4 1/2* | 80 \| *3* | M 6 | 10 | **500.310** | **500.510** | **500.710** | **500.810** |
| 12 \| *1/2* | 115 \| *4 1/2* | 80 \| *3* | M 6 | 10 | **500.312** | **500.512** | **500.712** | **500.812** |
| 13 \| *1/2* | 115 \| *4 1/2* | 80 \| *3* | M 6 | 10 | **500.313** | **500.513** | **500.713** | **500.813** |
| 14 \| *9/16* | 115 \| *4 1/2* | 80 \| *3* | M 6 | 10 | **500.314** | **500.514** | **500.714** | **500.814** |
| 15 \| *5/8* | 115 \| *4 1/2* | 80 \| *3* | M 6 | 10 | **500.315** | **500.515** | **500.715** | **500.815** |
| 16 \| *5/8* | 115 \| *4 1/2* | 80 \| *3* | M 6 | 10 | **500.316** | **500.516** | **500.716** | **500.816** |
| 18 \| *5/8* | 115 \| *4 1/2* | 80 \| *3* | M 6 | 10 | **500.318** | **500.518** | **500.718** | **500.818** |
| 19 \| *3/4* | 115 \| *4 1/2* | 80 \| *3* | M 6 | 10 | **500.319** | **500.519** | **500.719** | **500.819** |
| 20 \| *3/4* | 115 \| *4 1/2* | 80 \| *3* | M 6 | 10 | **500.320** | **500.520** | **500.720** | **500.820** |

**4 Interior Brushes with external thread IBG, Silicon Carbide Bristles**

| D | L | A | Thread | Pack. | SIC 180/0.9 Art.-No. |
|---|---|---|---|---|---|
| **Single Spirale** | | | | | |
| mm \| *inch* | mm \| *inch* | mm \| *inch* | | | |
| 10 \| *3/8* | 115 \| *4 1/2* | 80 \| *3* | M 6 | 10 | *500.010* |
| 16 \| *5/8* | 115 \| *4 1/2* | 80 \| *3* | M 6 | 10 | *500.016* |
| 20 \| *3/4* | 150 \| *6* | 100 \| *4* | W 1/2 | 10 | *502.050.24* |
| 22 \| *7/8* | 150 \| *6* | 100 \| *4* | W 1/2 | 10 | *502.052.24* |
| 25 \| *1* | 150 \| *6* | 100 \| *4* | W 1/2 | 10 | *502.055.24* |
| 28 \| *1* | 150 \| *6* | 100 \| *4* | W 1/2 | 10 | *502.058.24* |

# Tube/Sleeve brushes

## Tube Brushes with external Thread W 1/2

| | | | | 1 | 2 | 3 | 4 | 5 |
|---|---|---|---|---|---|---|---|---|
| | | | | Single Spirale IBG | | | | Double Spirale IBGD |
| D | L | A | Pack. | STA straight | ROF straight | MES crimped | PA straight | STA straight |
| mm \| *inch* | mm \| *inch* | mm \| *inch* | | Art.-No. | Art.-No. | Art.-No. | Art.-No. | Art.-No. |
| 20 \| *3/4* | 150 \| *6* | 100 \| *4* | 10 | **502.120.24** | **502.420.24** | **502.720.24** | **502.820.24** | **522.120.24** |
| 22 \| *7/8* | 150 \| *6* | 100 \| *4* | 10 | **502.122.24** | **502.422.24** | **502.722.24** | **502.822.24** | **522.122.24** |
| 25 \| *1* | 150 \| *6* | 100 \| *4* | 10 | **502.125.24** | **502.425.24** | **502.725.24** | **502.825.24** | **522.125.24** |
| 28 \| *1* | 150 \| *6* | 100 \| *4* | 10 | **502.128.24** | **502.428.24** | **502.728.24** | | **522.128.24** |
| 30 \| *1 1/4* | 160 \| *6 3/8* | 100 \| *4* | 10 | **506.130** | **506.430** | **506.730** | **506.830** | **526.130** |
| 32 \| *1 1/4* | 160 \| *6 3/8* | 100 \| *4* | 10 | **506.132** | **506.432** | **506.732** | **506.832** | **526.132** |
| 35 \| *1 1/2* | 160 \| *6 3/8* | 100 \| *4* | 10 | **506.135** | **506.435** | **506.735** | **506.835** | **526.135** |
| 38 \| *1 1/2* | 160 \| *6 3/8* | 100 \| *4* | 10 | **506.138** | **506.438** | **506.738** | **506.838** | **526.138** |
| 40 \| *1 3/8* | 160 \| *6 3/8* | 100 \| *4* | 10 | **506.140** | **506.440** | **506.740** | **506.840** | **526.140** |
| 44 \| *1 3/4* | 160 \| *6 3/8* | 100 \| *4* | 5 | **506.144** | **506.444** | **506.744** | **506.844** | **526.144** |
| 50 \| *2* | 160 \| *6 3/8* | 100 \| *4* | 5 | **506.150** | **506.450** | **506.750** | **506.850** | **526.150** |
| 57 \| *2 1/4* | 160 \| *6 3/8* | 100 \| *4* | 5 | **506.157** | **506.457** | **506.757** | **506.857** | **526.157** |
| 63 \| *2 1/2* | 160 \| *6 3/8* | 100 \| *4* | 5 | **506.163** | **506.463** | **506.763** | **506.863** | **526.163** |
| 69 \| *2 3/4* | 160 \| *6 3/8* | 100 \| *4* | 5 | **506.169** | *506.469* | **506.769** | **506.869** | **526.169** |
| 75 \| *3* | 160 \| *6 3/8* | 100 \| *4* | 5 | **506.175** | **506.475** | **506.775** | **506.875** | **526.175** |
| 82 \| *3 1/4* | 160 \| *6 3/8* | 100 \| *4* | 5 | **506.182** | **506.482** | **506.782** | *506.882* | **526.182** |
| 88 \| *3 3/8* | 160 \| *6 3/8* | 100 \| *4* | 5 | **506.188** | *506.488* | *506.788* | *506.888* | **526.188** |
| 94 \| *3 5/8* | 160 \| *6 3/8* | 100 \| *4* | 5 | **506.194** | *506.494* | *506.794* | *506.894* | **526.194** |
| 101 \| *4* | 160 \| *6 3/8* | 100 \| *4* | 5 | **506.101** | **506.401** | **506.701** | **506.801** | **526.101** |
| 125 \| *5* | 160 \| *6 3/8* | 100 \| *4* | 5 | **506.106** | *506.406* | *506.706* | *506.806* | **526.106** |
| 150 \| *6* | 160 \| *6 3/8* | 100 \| *4* | 5 | **506.211** | *506.411* | *506.711* | *506.811* | *526.111* |
| 200 \| *8* | 160 \| *6 3/8* | 100 \| *4* | 5 | **506.220** | available on demand | *506.720* | *506.820* | available on demand |

**Mechanical Application**
Only use the brush with the indicated maximal peripheral speed (RPM max.). The max. RPM only is allowed when the brush is clamped min. for 10 mm into the tool. When the brush is inserted into the suitable work piece, higher RPMs are possible. Only use the brush right rotating.

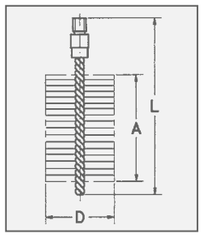


**Item Nos. in bold** are available ex stock.
Consider our minimum order value for *italic printed* article numbers (see page 139).

**STA** = steel wire
**ROF** = stainless steel wire
**MES** = brass wire
**PA** = polyamide

## Tube Brushes with internal Thread / Boiler Brushes IBG

| | D | L | A | Thread | Pack. | STA straight | PA straight |
|---|---|---|---|---|---|---|---|
| | mm \| *inch* | mm \| *inch* | mm \| *inch* | | | Art.-No. | Art.-No. |
| | **Single Spirale** | | | | | | |
| 1 | 30 \| *1 1/4* | 160 \| *6 1/4* | 100 \| *4* | M 10i | 10 | *506.130.60* | |
| 1 | 40 \| *1 3/8* | 160 \| *6 1/4* | 100 \| *4* | M 10i | 10 | *506.140.60* | |
| 1 | 50 \| *2* | 160 \| *6 1/4* | 100 \| *4* | M 10i | 10 | *506.150.60* | |
| 1 | 60 \| *2 3/8* | 160 \| *6 1/4* | 100 \| *4* | M 10i | 10 | *506.160.60* | |
| 1 | 80 \| *3* | 160 \| *6 1/4* | 100 \| *4* | M 10i | 10 | *506.180.60* | |
| 1 | 90 \| *3 1/2* | 160 \| *6 1/4* | 100 \| *4* | M 10i | 10 | **507.190** | |
| 1 | 101 \| *4* | 160 \| *6 1/4* | 100 \| *4* | M 10i | 10 | *506.101.60* | |
| 1 | 120 \| *4 3/4* | 160 \| *6 1/4* | 100 \| *4* | M 10i | 10 | **507.105** | *506.805.60* |
| 2 | 20 x 30 \| *3/4 / 1 1/4* | 140 \| *5 1/2* | 80 \| *3* | M 10i | 10 | **533.405** | |
| 2 | 15 x 30 \| *5/8 / 1 1/4* | 160 \| *6 1/4* | 100 \| *4* | M 10i | 10 | *533.408* | |
| 2 | 30 x 50 \| *1 1/4 / 2* | 160 \| *6 1/4* | 100 \| *4* | M 10i | 10 | *532.218.60* | |
| 2 | 40 x 90 \| *1 3/8 / 3 1/2* | 160 \| *6 1/4* | 100 \| *4* | M 10i | 10 | *532.214.60* | |
| 2 | 50 x 100 \| *2 / 4* | 160 \| *6 1/4* | 100 \| *4* | M 10i | 10 | *532.303.60* | |

Suitable back board brushes you find at page 111.

## Sleeves Brushes Conical, without Thread IBD

| | D | L | A | RPM | Pack. | Single Spirale | Double Spirale |
|---|---|---|---|---|---|---|---|
| | | | | | | STA straight | STA straight |
| | mm \| *inch* | mm \| *inch* | mm \| *inch* | max. | | Art.-No. | Art.-No. |
| 3 | 10/20 \| *3/8 / 3/4* | 170 \| *6 3/4* | 100 | 1,000 | 10 | **541.372** | **549.101** |
| 3 | 15/25 \| *5/8 / 1* | 170 \| *6 3/4* | 100 | 1,000 | 10 | **540.321** | **549.102** |
| 3 | 20/30 \| *3/4 / 1 1/4* | 170 \| *6 3/4* | 100 | 1,000 | 10 | **541.373** | **549.103** |
| 3 | 25/35 \| *1 / 1 3/8* | 170 \| *6 3/4* | 100 | 1,000 | 10 | **540.323** | **549.104** |
| 3 | 32/42 \| *1 1/4 / 1 5/8* | 170 \| *6 3/4* | 100 | 1,000 | 5 | **540.324** | **549.105** |
| 3 | 40/50 \| *1 3/8 / 2* | 170 \| *6 3/4* | 100 | 1,000 | 5 | **540.325** | **549.106** |
| 3 | 38/70 \| *1 1/2 / 2 3/4* | 170 \| *6 3/4* | 100 | 1,000 | 5 | *540.225* | **549.107** |
| 3 | 60/95 \| *2 3/8 / 3 3/4* | 170 \| *6 3/4* | 100 | 1,000 | 5 | **540.327** | **549.108** |

On request also tube and sleeve brushes with crimped wire are available.

# Boiler Brushes / Stove Pipe Brushes

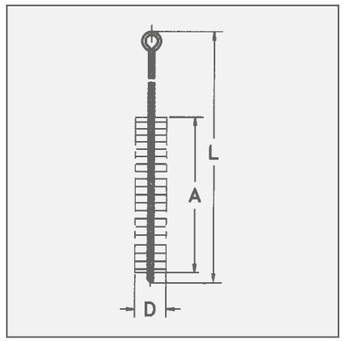


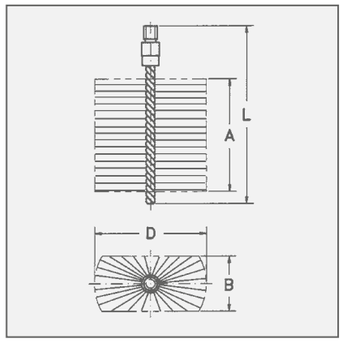


**Boiler Brushes**
The systematic care of boilers and regular cleaning by brushing increases the boiler efficiency and reduces toxic emissions.

LESSMANN boiler brushes are of outstanding quality made using the best materials and precise manufacturing procedures. Our current programme includes brushes in standard dimensions and special executions. As OEM supplier to important boiler manufacturers we are able to produce large quantities in an efficient way. What is even more important is our know how in meeting the critical tolerances demanded by our customers.

**Stove Pipe Brushes**
The stove pipe brushes are available in two different executions: with twisted handle (brush and handle one part) or with thread nipple, for screwing and lengthing by using a separate handle.

**Handles and Extension Pieces**
For tube brushes, boiler brushes and stove pipe brushes, see pages 105 - 107, 109 - 112. The twisted handles have an internal thread and a grip loop, the extension pieces have both an internal thread and an external thread.

**Suitable Thread Adapters**
see page 113

**Item Nos. in bold** are available ex stock.
Consider our minimum order value for *italic printed* article numbers (see page 139).

STA = steel wire
PA = polyamide



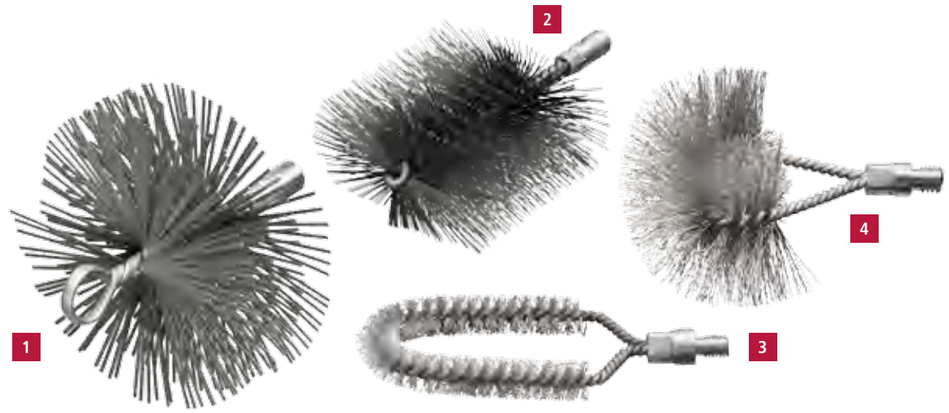


EAN **1 Chimney Brushes with Eye and internal Thread IBZG, Flat Wire 2.0 x 0.40**

| Filling | D | L | A | Internal Thread | Pack | Art.-No. | Filling | D | L | A | Internal Thread | Pack | Art.-No. |
|---|---|---|---|---|---|---|---|---|---|---|---|---|---|
| **STA** flat | 125 | 160 | 55 | M 12 i | 1 | **507.007** | **STA** flat | 250 | 160 | 55 | M 12 i | 1 | **507.004** |
| **STA** flat | 150 | 160 | 55 | M 12 i | 1 | **507.001** | **STA** flat | 300 | 160 | 55 | M 12 i | 1 | **507.005** |
| **STA** flat | 175 | 160 | 55 | M 12 i | 1 | **507.002** | **STA** flat | 350 | 160 | 55 | M 12 i | 1 | **507.006** |
| **STA** flat | 200 | 160 | 55 | M 12 i | 1 | **507.003** | | | | | | | |

**Boiler Brushes with external Thread IBG, Steel Wire, rectangular/curved**

| | Filling | B mm \| *inch* | D mm \| *inch* | Format | L mm \| *inch* | A mm \| *inch* | Thread | Pack. | Art.-No. |
|---|---|---|---|---|---|---|---|---|---|
| 2 | **PA** straight | 30 \| *1 1/4* | 50 \| *2* | rectangular | 160 \| *6 3/8* | 100 \| *4* | W 1/2 | 5 | **533.008.24** |
| | **PA** straight | 50 \| *2* | 100 \| *4* | rectangular | 160 \| *6 3/8* | 100 \| *4* | W 1/2 | 5 | *533.010.24* |
| | **STA** straight | 30 \| *1 1/4* | 50 \| *2* | rectangular | 160 \| *6 3/8* | 100 \| *4* | W 1/2 | 5 | **532.218** |
| | **STA** straight | 30 \| *1 1/4* | 80 \| *3* | rectangular | 160 \| *6 3/8* | 100 \| *4* | W 1/2 | 5 | **532.211** |
| | **STA** straight | 40 \| *1 3/8* | 80 \| *3* | rectangular | 160 \| *6 3/8* | 100 \| *4* | W 1/2 | 5 | **532.202** |
| | **STA** straight | 50 \| *2* | 100 \| *4* | rectangular | 160 \| *6 3/8* | 100 \| *4* | W 1/2 | 5 | **532.203** |
| | **STA** straight | 50 \| *2* | 120 \| *4 3/4* | rectangular | 160 \| *6 3/8* | 100 \| *4* | W 1/2 | 5 | **532.205** |
| 3 | **STA** crimped | 18 \| *5/8* | 70 \| *2 3/4* | curved | 160 \| *6 3/8* | 100 \| *4* | W 1/2 | 5 | **529.301.24** |
| | **STA** crimped | 30 \| *1 1/4* | 80 \| *3* | curved | 175 \| *6 7/8* | 120 \| *4 3/4* | W 1/2 | 5 | **529.302** |
| 4 | **STA** crimped | 80 \| *3* | 150 \| *6* | curved | 150 \| *6* | 120 \| *4 3/4* | W 1/2 | 5 | **529.311** |
| | **PA** straight | 80 \| *3* | 150 \| *6* | curved | 150 \| *6* | 120 \| *4 3/4* | W 1/2 | 5 | *529.811* |
| | **STA** crimped | 80 \| *3* | 150 \| *3 / 6* | curved | 150 \| *6* | 120 \| *4 3/4* | M 10i | 5 | *529.301.60* |

# Boiler Brushes

1 2 3

**Boiler Brushes with Handle IBE**

| | Filling | B mm \| *inch* | D mm \| *inch* | Format | L mm \| *inch* | A mm \| *inch* | Pack. | Art.-No. |
|---|---|---|---|---|---|---|---|---|
| 1 | **PA** straight | | 20 \| *3/4* | round | 600 \| *23 5/8* | 100 \| *4* | 10 | **544.804** |
| | **STA** crimped | | 50 \| *2* | round | 700 \| *27 1/2* | 100 \| *4* | 10 | **544.301** |
| | **STA** crimped | | 90 \| *3 1/2* | round | 600 \| *23 5/8* | 100 \| *4* | 10 | **544.302** |
| | **STA** crimped | | 10 \| *3/8* | round | 850 \| *33 1/2* | 100 \| *4* | 10 | **545.320** |
| | **STA** crimped | | 15 \| *5/8* | round | 850 \| *33 1/2* | 100 \| *4* | 10 | *545.321* |
| 2 | **STA** crimped | | 20 \| *3/4* | round | 850 \| *33 1/2* | 100 \| *4* | 10 | **545.322** |
| | **STA** crimped | | 25 \| *1* | round | 850 \| *33 1/2* | 100 \| *4* | 10 | **545.307** |
| | **STA** crimped | | 35 \| *1 1/2* | round | 850 \| *33 1/2* | 100 \| *4* | 10 | **545.311** |
| | **STA** crimped | | 50 \| *2* | round | 850 \| *33 1/2* | 100 \| *4* | 10 | **545.312** |
| | **STA** crimped | | 60 \| *2 3/8* | round | 850 \| *33 1/2* | 100 \| *4* | 10 | *545.338* |
| | **PA** straight | 12 \| *1/2* | 14 \| *9/16* | rectangular | 600 \| *23 5/8* | 150 \| *6* | 10 | **554.903** |
| | **STA** straight | 17 \| *5/8* | 50 \| *2* | rectangular | 960 \| *38* | 60 \| *2 3/8* | 10 | **564.101**** |
| | **STA** crimped | 30 \| *1 1/4* | 50 \| *2* | rectangular | 800 \| *31 1/2* | 100 \| *4* | 10 | **551.801** |
| 3 | **STA** crimped | 40 \| *1 3/8* | 50 \| *2* | rectangular | 1,000 \| *39 3/8* | 80 \| *3* | 10 | **553.711** |
| | **STA** straight | 40 \| *1 3/8* | 80 \| *3* | rectangular | 1,000 \| *39 3/8* | 100 \| *4* | 10 | **552.404** |
| | **STA** crimped | 40 \| *1 3/8* | 90 \| *3 1/2* | rectangular | 1,000 \| *39 3/8* | 80 \| *3* | 10 | **564.301*** |
| | **STA** straight | 50 \| *2* | 100 \| *4* | rectangular | 1,000 \| *39 3/8* | 100 \| *4* | 10 | **552.403** |

* Rod made from spring steel 5 Ø | ** with scooped scratcher in the handle

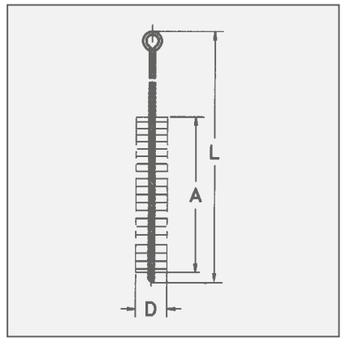


**Item Nos. in bold** are available ex stock.
Consider our minimum order value for *italic printed* article numbers (see page 139).

**STA** = steel wire
**PA** = polyamide



# Boiler Brushes-Sets

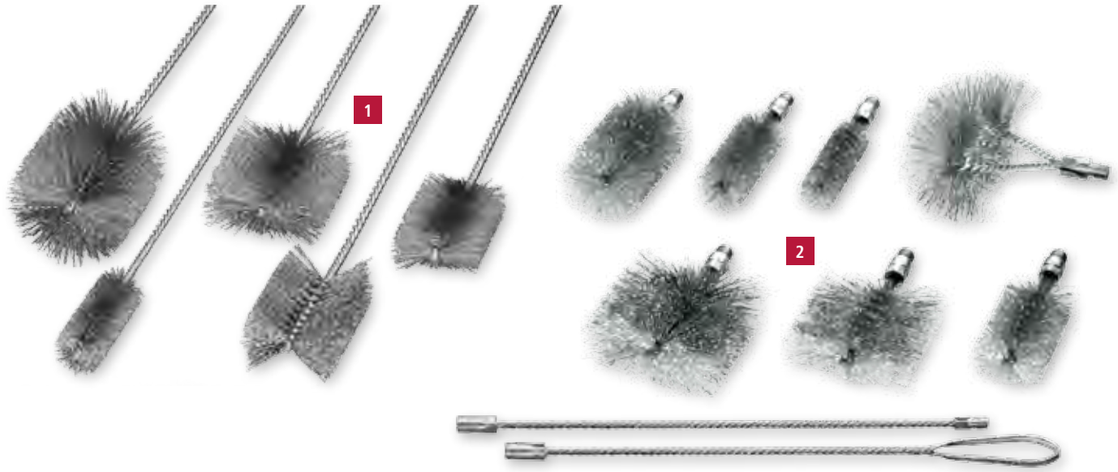

1 2



EAN **1 Brush Set, 5 pieces**

| Content: 1 piece each | A | Format | Set with handle, big edition, steel wire: Art.-No. | D | L | Art.-No. Set | Set with handle, small edition, steel wire: Art.-No. | D | L | Art.-No. Set |
|---|---|---|---|---|---|---|---|---|---|---|
| Cylinder Brush | 100 | round | 545.303 | 38 | 1.000 | **599.921** | 544.307 | 15 | 600 | **599.931** |
| Cylinder Brush | 100 | round | 545.331 | 100 | 1.000 | | 544.361 | 25 | 800 | |
| Boiler Brush | 100 | rectangular | 552.811 | 30 x 70 | 1.000 | | 559.831 | 31 x 20 | 600 | |
| Boiler Brush | 100 | rectangular | 552.816 | 50 x 100 | 1.000 | | 551.811 | 30 x 20 | 500 | |
| Boiler Brush | 100 | rectangular | 559.713 | 75 x 30 | 1.000 | | 551.812 | 50 x 40 | 700 | |

EAN **2 Brush Set, Steel Wire, external Thread W 1/2, crimped, 9 pieces**

| Content: 1 piece each | | D mm \| *inch* | L mm \| *inch* | A mm \| *inch* | Format | Art.-No. Set |
|---|---|---|---|---|---|---|
| 506.330 | Interior Brushes | 30 \| *1 1/4* | 160 \| *6 1/4* | 100 \| *4* | round | **599.962** |
| 506.340 | Interior Brushes | 40 \| *1 3/8* | 160 \| *6 1/4* | 100 \| *4* | round | |
| 506.363 | Interior Brushes | 63 \| *2 1/2* | 160 \| *6 1/4* | 100 \| *4* | round | |
| 532.718 | Boiler Brush | 30 x 50 \| *1 1/4 / 2* | 160 \| *6 1/4* | 100 \| *4* | rectangular | |
| 532.716 | Boiler Brush | 30 x 90 \| *1 1/4 / 3 1/2* | 160 \| *6 1/4* | 100 \| *4* | rectangular | |
| 532.703 | Boiler Brush | 50 x 100 \| *2 / 4* | 160 \| *6 1/4* | 100 \| *4* | rectangular | |
| 529.311 | Back board brush | 80 x 150 \| *3 / 6* | 150 \| *6* | | | |
| 567.671 | Handle with Eye | | 500 \| *20* | | | |
| 567.771 | Extension | | 500 \| *20* | | | |

EAN **Brush Set, Polyamide Bristles, external Thread W 1/2, crimped, 9 pieces**

| Content: 1 piece each | | D mm \| *inch* | L mm \| *inch* | A mm \| *inch* | Format | Art.-No. Set |
|---|---|---|---|---|---|---|
| 506.838 | Interior Brushes | 38 \| *1 1/2* | 160 \| *6 1/4* | 100 \| *4* | round | **599.991** |
| 506.855 | Interior Brushes | 55 \| *2 1/4* | 160 \| *6 1/4* | 100 \| *4* | round | |
| 506.860 | Interior Brushes | 60 \| *2 3/8* | 160 \| *6 1/4* | 100 \| *4* | round | |
| 533.008.24 | Boiler Brush | 30 x 50 \| *1 1/4 / 2* | 160 \| *6 1/4* | 100 \| *4* | rectangular | |
| 533.009.24 | Boiler Brush | 30 x 90 \| *1 1/4 / 3 1/2* | 160 \| *6 1/4* | 100 \| *4* | rectangular | |
| 533.010.24 | Boiler Brush | 50 x 100 \| *2 / 4* | 160 \| *6 1/4* | 100 \| *4* | rectangular | |
| 529.811 | Back board brush | 80 x 150 \| *3 / 6* | 150 \| *6* | | | |
| 567.671 | Handle with Eye | | 500 \| *20* | | | |
| 567.771 | Extension | | 500 \| *20* | | | |

# Stove Pipe Brushes

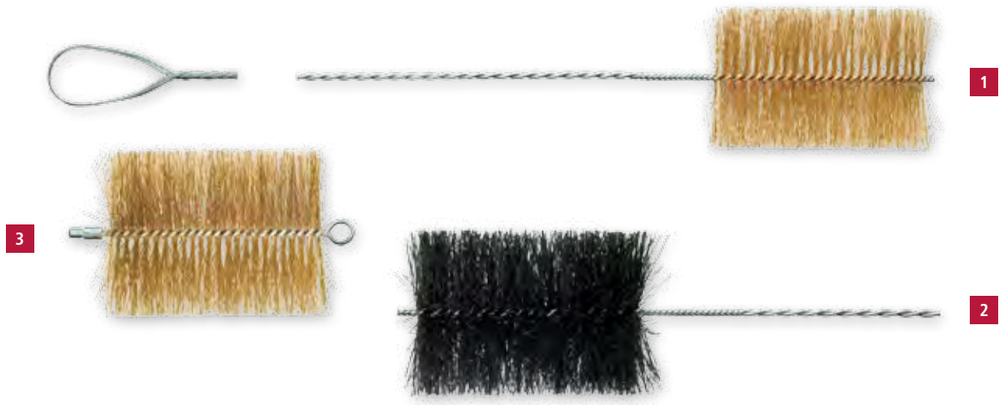


## Stove Pipe Brushes with Twisted Handle IBZ

| | Filling | D mm \| *inch* | L mm \| *inch* | A mm \| *inch* | Pack. | Art.-No. |
|---|---|---|---|---|---|---|
| 1 | **STM** | 130 \| *5 1/8* | 2,000 \| *78 3/4* | 200 \| *8* | 10 | **546.302** |
| | **STM** | 130 \| *5 1/8* | 3,000 \| *118* | 200 \| *8* | 10 | **546.304** |
| | **STM** | 150 \| *6* | 2,000 \| *78 3/4* | 200 \| *8* | 10 | **546.306** |
| | **STM** | 180 \| *7* | 2,000 \| *78 3/4* | 200 \| *8* | 10 | **546.314** |
| | **STM** | 200 \| *8* | 2,000 \| *78 3/4* | 200 \| *8* | 10 | **546.318** |
| 2 | **BAS** | 150 \| *6* | 2,000 \| *78 3/4* | 200 \| *8* | 10 | **546.906** |
| | **BAS** | 150 \| *6* | 3,000 \| *118* | 200 \| *8* | 10 | **546.908** |

**Delivery only in noted packaging unit.** If you need smaller quantities, please order stove pipe brushes with separate handle.

## 3 Stove Pipe Brushes with separate Handle IBZG

| Filling | D mm \| *inch* | L mm \| *inch* | A mm \| *inch* | Thread | Pack. | Art.-No. |
|---|---|---|---|---|---|---|
| **STM** | 80 \| *3* | 275 \| *10 7/8* | 200 \| *8* | M 10 | 5 | **507.307** |
| **STM** | 100 \| *4* | 275 \| *10 7/8* | 200 \| *8* | M 10 | 5 | **507.308** |
| **STM** | 130 \| *5 1/8* | 275 \| *10 7/8* | 200 \| *8* | M 10 | 5 | **507.301** |
| **STM** | 150 \| *6* | 275 \| *10 7/8* | 200 \| *8* | M 10 | 5 | **507.302** |
| **STM** | 160 \| *6 3/8* | 275 \| *10 7/8* | 200 \| *8* | M 10 | 5 | **507.303** |
| **STM** | 180 \| *7* | 275 \| *10 7/8* | 200 \| *8* | M 10 | 5 | **507.304** |
| **STM** | 200 \| *8* | 275 \| *10 7/8* | 200 \| *8* | M 10 | 5 | **507.305** |
| **BAS** | 150 \| *6* | 275 \| *10 7/8* | 200 \| *8* | M 10 | 5 | **507.959** |

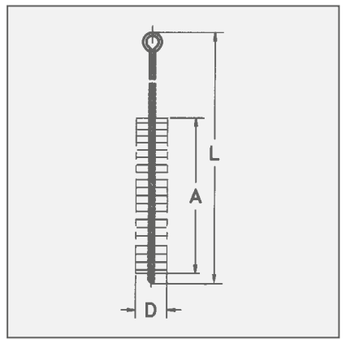


**Item Nos. in bold** are available ex stock.
Consider our minimum order value for *italic printed* article numbers (see page 139).k

**STM** = brass coated steel
**BAS** = bassine black

# Accessories

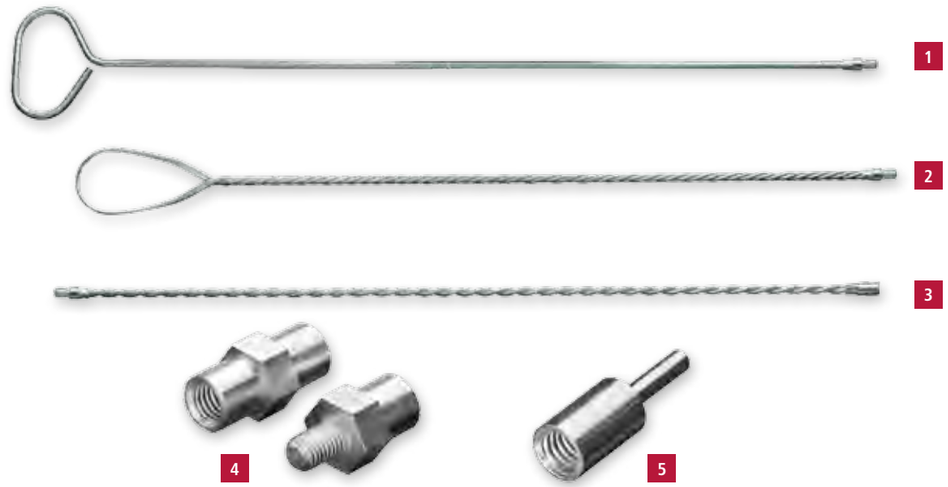


## Handle with Eye

| | L mm \| *inch* | Thread | Format | Pack. | Art.-No. |
|---|---|---|---|---|---|
| 1 | 400 \| *16* | External M 10 | round steel, straight | 1 | **568.805** |
| | 800 \| *31 1/2* | External M 10 | round steel, straight | 1 | *568.802* |
| | 1,000 \| *40* | External M 10 | round steel, straight | 1 | **568.806** |
| 2 | EAN 1,000 \| *40* | Internal M 4 | twisted wire | 1 | *566.603* |
| | EAN 1,000 \| *40* | Internal M 6 | twisted wire | 1 | **566.601** |
| | EAN 1,000 \| *40* | Internal M 10 | twisted wire | 1 | **566.602** |
| | EAN 1,000 \| *40* | External M 12 | twisted wire | 1 | **567.201** |
| | EAN 1,000 \| *40* | Internal W 3/8 | twisted wire | 1 | *567.603* |
| | 500 \| *20* | Internal W 1/2 | twisted wire | 1 | **567.671** |
| | EAN 1,000 \| *40* | Internal W 1/2 | twisted wire | 1 | **567.601** |

## 3 Extension

| | L mm \| *inch* | Thread | Format | Pack. | Art.-No. |
|---|---|---|---|---|---|
| | EAN 1,000 \| *40* | Internal / External M 4 | twisted wire | 1 | **566.703** |
| | EAN 1,000 \| *40* | Internal / External M 6 | twisted wire | 1 | **566.701** |
| | EAN 1,000 \| *40* | Internal / External M 10 | twisted wire | 1 | **566.702** |
| | EAN 1,000 \| *40* | Internal / External M 12 | twisted wire | 1 | **567.731** |
| | EAN 1,000 \| *40* | Internal / External W 3/8 | twisted wire | 1 | *567.703* |
| | 500 \| *20* | Internal / External W 1/2 | twisted wire | 1 | **567.771** |
| | EAN 1,000 \| *40* | Internal / External W 1/2 | twisted wire | 1 | **567.701** |

## EAN Adapter Threads

| | | | L mm \| *inch* | Pack. | Art.-No. |
|---|---|---|---|---|---|
| 4 | Internal W 1/2 | Internal M 12 | 40 \| *1 3/8* | 1 | **001.211** |
| | Internal W 1/2 | Internal M 10 | 40 \| *1 3/8* | 1 | **001.212** |
| | Internal W 3/8 | Internal M 10 | 40 \| *1 3/8* | 1 | *001.215* |
| | External M 10 | Internal W 1/2 | 40 \| *1 3/8* | 1 | **001.222** |
| | External M 10 | Internal W 3/8 | 40 \| *1 3/8* | 1 | **001.225** |
| 5 | Internal W 1/2 | Shank Ø 6 mm | 50 \| *2* | 1 | **000.071** |
| | Internal M 6 | Shank Ø 6 mm | 50 \| *2* | 1 | **000.072** |

# Fitting Brushes

1 2 3

EAN

## 1 Interior Fitting Brushes IBM

| D mm \| *inch* | L | A | Filling Material | Pack. | Art.-No. |
|---|---|---|---|---|---|
| 8 \| *5/16* | 185 | 12 | **ROF** 0.10 \| *0.004"* | 10 | **562.508** |
| 10 \| *3/8* | 185 | 12 | **ROF** 0.10 \| *0.004"* | 10 | **562.510** |
| 12 \| *1/2* | 185 | 15 | **ROF** 0.10 \| *0.004"* | 10 | **562.512** |
| 15 \| *5/8* | 185 | 20 | **ROF** 0.15 \| *0.006"* | 10 | **562.515** |

| D mm \| *inch* | L | A | Filling Material | Pack. | Art.-No. |
|---|---|---|---|---|---|
| 18 \| *5/8* | 185 | 20 | **ROF** 0.15 \| *0.006"* | 10 | **562.518** |
| 22 \| *7/8* | 185 | 25 | **ROF** 0.20 \| *0.008"* | 10 | **562.522** |
| 28 \| *1* | 185 | 25 | **ROF** 0.20 \| *0.008"* | 10 | **562.528** |
| 35 \| *1 1/2* | 185 | 25 | **ROF** 0.20 \| *0.008"* | 10 | **562.535** |

## 2 Exterior Fitting Brushes, Steel Wire

| D mm \| *inch* | d | Suitable for casing size | Pack. | Art.-No. |
|---|---|---|---|---|
| 39 \| *1 3/8* | 10 | 1/4" | 6 | **037.921** |
| 39 \| *1 3/8* | 12 | 3/8" | 6 | **037.922** |
| 42 \| *1 5/8* | 15 | 1/2" | 6 | **037.923** |

| D mm \| *inch* | d | Suitable for casing size | Pack. | Art.-No. |
|---|---|---|---|---|
| 48 \| *1 7/8* | 18 | 5/8" | 6 | **037.924** |
| 48 \| *1 7/8* | 22 | 3/4" | 6 | **037.925** |
| 55 \| *2 1/4* | 28 | 1" | 6 | **037.927** |

## 3 Fitting Brush Set, 8 Pieces

| | Art.-No. |
|---|---|
| 4 interior and exterior brushes each dia 1/2 / 5/8 / 3/4 /7/8 in a plastic bag | *599.908* |

**Fitting Brushes**
**Now with new designed two-components handle**
For the inner cleaning in tubes in gas, water and climatic conditions. We use only stainless steel wire as the filling material for these brushes. This prevents long-term damage by material deposit in tubes. Fitting brushes for exterior cleaning contain a card from steel wire.

**Fitting Brush Set**
A case of artificial leather that contains the most frequently needed interior and exterior brushes.

**Recommendation for users:** When using interior fitting brushes, please only use brushes with stainless steel wire. This will avoid pitting by the use of rusting wire parts.

2

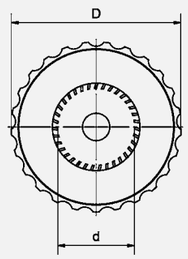


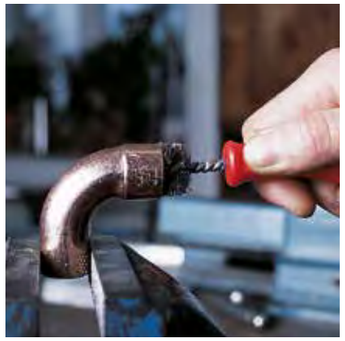



# Brushes and Scratcher

1 2 3 4

## 1 Battery Terminal Brushes

| Filling Material | D mm \| *inch* | L mm \| *inch* | A mm \| *inch* | Pack. | Art.-No. |
|---|---|---|---|---|---|
| **STA** | 17/24 \| *5/8 / 1* | 120/180 \| *4 3/4 / 7* | 60 \| *2 3/8* | 12 | **563.301*** |

## 2 Soluble Oil Brushes

| Filling Material | Ø Bundle mm \| *inch* | L mm \| *inch* | H mm \| *inch* | Pack. | Art.-No. |
|---|---|---|---|---|---|
| **mixed hair** | 7 \| *1/4* | 150 \| *6* | 40 \| *1 3/8* | 100 | **570.907** |
| **mixed hair** | 10 \| *3/8* | 240 \| *9 1/2* | 55 \| *2 1/4* | 100 | **570.910** |

## 3 Soldering Fluid Brushes

| Filling Material | D mm \| *inch* | L mm \| *inch* | H mm \| *inch* | Pack. | Art.-No. |
|---|---|---|---|---|---|
| **bristles** | 10 \| *3/8* | 123 \| *4 7/8* | 20 \| *3/4* | 100 | **045.910** |
| **bristles** | 15 \| *5/8* | 140 \| *5 1/2* | 25 \| *1* | 100 | **045.915** |
| **STA** | 20 \| *3/4* | 205 \| | 30 \| *1 1/4* | 200 | **045.301** |

## 4 Rust Scratcher

| Filling Material | D mm \| *inch* | L mm \| *inch* | H mm \| *inch* | Pack. | Art.-No. |
|---|---|---|---|---|---|
| **STA** straight 0.23 | 5/8 \| *1/4 / 5/16* | 100 \| *4* | 6 \| *1/4* | 180 | **184.101** |
| **STA** Straight 0.23 \| *0.009"* + **PP** 0.15 \| *0.006"* | 5/8 \| *1/4 / 5/16* | 100 \| *4* | 6/15 \| *1/4 / 5/8* | 180 | *184.104* |

* conical filling

**Battery Terminal Brushes**
For cleaning of battery terminals. The twisted brush is conical filled for cleaning connection terminals of the battery cable. To clean the battery terminals use the ringshaped filed cards stuck in the handle.

**Soluble Oil Brushes**
With twisted wire handle for workshop use.

**Soldering Fluid Brushes**
The handle is made of tinned metal.

**Item Nos. in bold** are available ex stock.
Consider our minimum order value for *italic printed* article numbers (see page 139).

**STA** = steel wire
**ROF** = stainless steel wire
**PP** = polyprophylene

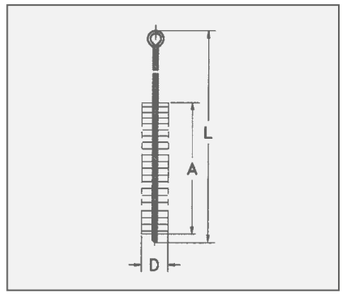

LESSMANN®
THE GERMAN BRUSH COMPANY

# D.I.Y. BRUSHES AND SALES PROMOTION

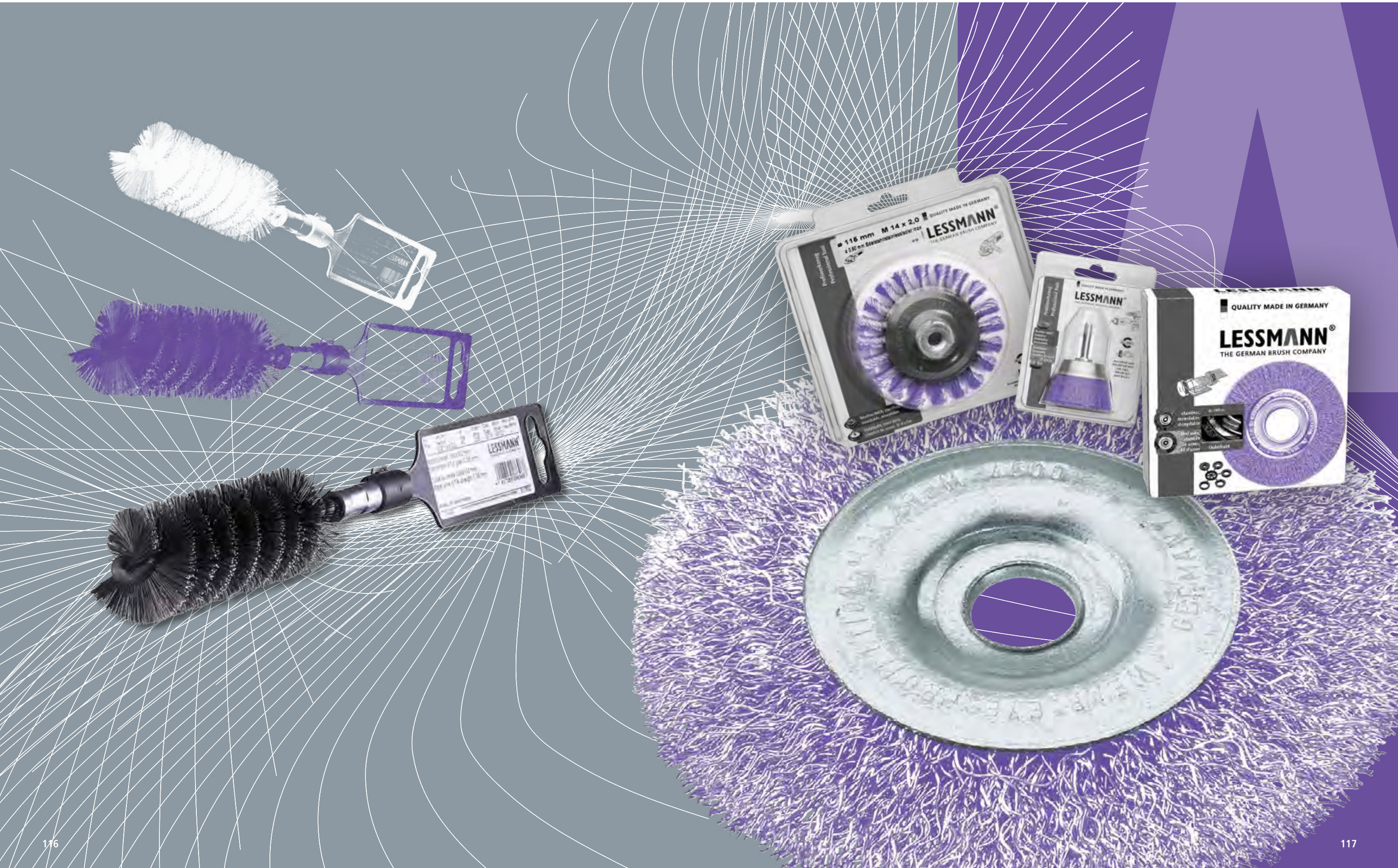

# Do It Yourself Brushes

**D.I.Y Brushes with Shank**
Do It Yourself brushes are an excellent alternative to the professional tools previously shown in this catalogue. Available are cup brushes from diameter 50 - 75 mm, wheel brushes diameter 50 - 100 mm, end brushes and cylinder brushes.

**Stainless Steel Brushes**
Information on working on stainless steel you find at www.lessmann.com

**Attractive assortment**
Coarse and fine steel wire, brass wire and abrasive filaments are available as filling materials.

The brushes are packed in small display cartons, 10 pieces per carton.

We offer different packaging to present these and other common brushes with shanks in specialist shops.

**Item Nos. in bold** are available ex stock.
Consider our minimum order value for *italic printed* article numbers (see page 139).

| | |
|---|---|
| **STA** | = steel wire, crimped |
| **ROF** | = stainless steel wire |
| **MES** | = brass wire, crimped |
| **SIC** | = brass wire |

**Wheel Brushes with Shank 6 mm Ø**

| D mm \| *inch* | A mm \| *inch* | RPM max. | Pack. | 1 STA 0.20 \| *0.008"* 0.25 \| *0.010"* Art.-No. | STA 0.30 \| *0.012"* 0.35 \| *0.014"* Art.-No. | ROF 0.20 \| *0.008"* Art.-No. | ROF 0.30 \| *0.012"* Art.-No. |
|---|---|---|---|---|---|---|---|
| 50 \| *2* | 8-10 \| *3/8* | 4,500 | 10 | **410.122** | **410.123** | | |
| 75 \| *3* | 8-10 \| *3/8* | 4,500 | 10 | **410.132** | **410.133** | **410.134** | **410.135** |
| 75 \| *3* | 14-16 \| *5/8* | 4,500 | 10 | | **410.173** | | |
| 100 \| *4* | 8-10 \| *3/8* | 4,500 | 10 | **410.152** | **410.153** | **410.154** | **410.155** |
| 100 \| *4* | 14-16 \| *5/8* | 4,500 | 10 | | **410.183** | | **410.185** |

| D mm \| *inch* | A mm \| *inch* | RPM max. | Pack. | 2 MES 0.25 \| *0.010"* Art.-No. | SIC 80/1.2 Art.-No. | SIC 180/0.9 Art.-No. |
|---|---|---|---|---|---|---|
| 75 \| *3* | 8-10 \| *3/8* | 4,500 | 10 | **410.136** | **410.138** | *410.139* |
| 100 \| *4* | 8-10 \| *3/8* | 4,500 | 10 | **410.156** | **410.158** | *410.159* |

**5 End Brushes with Shank 6 mm Ø**

| D mm \| *inch* | RPM max. | Pack. | STA 0.30 \| *0.012"* Art.-No. | SIC 80/1.2 Art.-No. |
|---|---|---|---|---|
| 25 \| *1* | 12,000 | 10 | **455.161** | **453.821** |

**6 Cylinder Brushes with Shank 6 mm Ø**

| D mm \| *inch* | RPM max. | Pack. | STA 0.30 \| *0.012"* Art.-No. |
|---|---|---|---|
| 28 \| *1* | 1,500 | 10 | **541.301** |

**7 D.I.Y. Wheel Brushes with bore**

| D mm \| *inch* | A mm \| *inch* | d | RPM max. | Pack. | STA 0.35 \| *0.014"* Art.-No. |
|---|---|---|---|---|---|
| 75 \| *3* | 10 \| *3/8* | 1/2" | 4,500 | 10 | **300.102** |
| 100 \| *4* | 10 \| *3/8* | 1/2" | 4,500 | 10 | **320.102** |

**3 Cup Brushes with Shank 6 mm Ø**

| D mm \| *inch* | RPM max. | Pack. | STA 0.25 \| *0.010"* Art.-No. | STA 0.35 \| *0.014"* Art.-No. | ROF 0.20 \| *0.008"* Art.-No. | ROF 0.30 \| *0.012"* Art.-No. |
|---|---|---|---|---|---|---|
| 50 \| *2* | 4,500 | 10 | **430.122** | **430.123** | **430.124** | **430.125** |
| 75 \| *3* | 4,500 | 10 | **430.132** | **430.133** | **430.134** | **430.135** |

| D mm \| *inch* | RPM max. | Pack. | 4 MES 0.25 \| *0.010"* Art.-No. | SIC 80/1.2 Art.-No. | SIC 320/0.6 Art.-No. |
|---|---|---|---|---|---|
| 50 \| *2* | 4,500 | 10 | **430.126** | **430.128** | **430.129** |
| 75 \| *3* | 4,500 | 10 | **430.136** | **430.138** | **430.139** |

# Packing and Sales Promotion

The most demanded tool brushes are not only offered single or bulk packed. These fast sellers are presented even better in sale promoting display cartons. They can be put on tool shelves or on the counter.

The standard assortment contains:
- Knot cup brushes diameter 65
- Knot wheel brushes diameter 115
- Knot bevel brushes diameter 100
- Cup brushes with crimped wire diameter 60

A display carton with the best selling Do It Yourself Brushes, bulk packed, completes the offer (see pages 124 - 125).

**Brushes with blister packing**
All standard brushes for drilling machines and angle grinders are available with blister packing. The blister packing is available with attractive labels with information about technical data and EAN-bar code. The clam shells emphasize the brushes' value, protect them and provide good visible presentation.

On request we can arrange your individual private label solution.

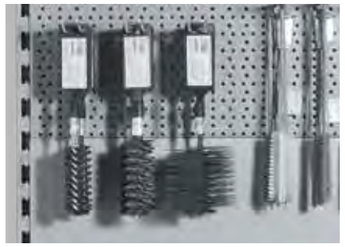

**Presentation for tube brushes**
With this practical hanger assembly from now on also tube brushes with thread can be presented on self-service walls in the retail market.
The hangers are available in M 6, M 10, W 3/8" and W 1/2". All hangers are with a eurohole.
A label can be fixed at the front of the hanger.

**Cut Cases for presenting the products**
Cut Cases are a simple alternative for presenting brushes in large quantities. The Products can be inserted in the self-service wall modularly.

Low-cost product presentation – Brushes on card

Technical data on front, details and EAN on back: Blister Packing

EAN **Displaybox with Toolbrushes**

| Pack | Catalogue Page | Filling | D mm \| *inch* | d mm \| *inch* | RPM max. | Pack. | Art.-No. |
|---|---|---|---|---|---|---|---|
| Knot Cup Brushes | 51 | **STH** 0.50 \| *0.020"* | 65 \| *2 1/2* | M 14 x 2.0 | 12.500 | 20 | **482.217.07** |
| Knot Wheel Brushes | 17 | **STH** 0.50 \| *0.020"* | 115 \| *4 1/2* | 22.2 \| *7/8* | 12.500 | 18 | **472.211.07** |
| Knot Bevel Brushes | 57 | **STH** 0.50 \| *0.020"* | 100 \| *4* | M 14 x 2.0 | 12.500 | 12 | **471.257.07** |
| Crimped Cup Brushes | 54 | **STA** 0.30 \| *0.012"* | 60 \| *2 3/8* | M 14 x 2.0 | 12.500 | 20 | **421.167.07** |

**D.I.Y. Brush Assortments; Shank Brushes,** Description Page 119

| Contents: 36 pieces assorted | | | | | | Art.-No. |
|---|---|---|---|---|---|---|
| 6 Wheel Brushes | 410.132 | 6 Wheel Brushes | 410.153 | 6 Cup Brushes | 430.123 | **499.907** |
| 6 Cup Brushes | 430.133 | 6 End Brushes | 455.161 | 6 Cylinder Brushes | 541.301 | |
| 9 Wheel Brushes | 410.132 | 9 Cup Brushes | 430.123 | | | **499.921** |
| 9 Wheel Brushes | 410.153 | 9 Cup Brushes | 430.133 | | | |

EAN **Brushes with Shank 6 mm Ø on Card** Description and technical data please see table above and on page 63, 118, 119

| | D mm \| *inch* | Pack. | **STA 0.30** \| *0.012"* **0.35** \| *0.014"* | **MES 0.25** \| *0.010"* Art.-No. | **SIC 80** Art.-No. | **STH knotted 0.50** \| *0.020"* |
|---|---|---|---|---|---|---|
| Wheel Brushes | 50 \| *2* | 10 | **410.123.07** | | | |
| | 75 \| *3* | 10 | **410.133.07** | **410.136.07** | **410.138.07** | **417.198.07** |
| | 100 \| *4* | 10 | **410.153.07** | | **410.158.07** | |
| Cup Brushes | 50 \| *2* | 10 | **430.123.07** | **430.126.07** | **430.128.07** | |
| | 75 \| *3* | 10 | **430.133.07** | | **430.138.07** | |
| End Brushes | 25 \| *1* | 10 | **455.161.07** | | | |
| Cylinder Brushes | 28 \| *1* | 10 | **541.301.07** | | | |

**Item Nos. in bold** are available ex stock.
Consider our minimum order value for *italic printed* article numbers (see page 139).

**STA** = steel wire, crimped
**STH** = steel wire, high tensile, straight
**MES** = brass wire, crimped
**SIC** = silicon carbide bristles

# Packing and Sales Promotion

## Brushes for Angle Grinders in Blister Packaging

| | D | Thread | STH 0.35 \| *0.014"* | STH 0.50 \| *0.020"* | ROH 0.30 \| *0.012"* | ROH 0.50 \| *0.020"* | STA 0.35 \| *0.014"* |
|---|---|---|---|---|---|---|---|
| | mm \| *inch* | mm \| *inch* | Art.-No. | Art.-No. | Art.-No. | Art.-No. | Art.-No. |
| Knot Cup Brushes | 65 \| *2 1/2* | M 14 | *482.117.09* | *482.217.09* | | *482.817.09* | |
| | 65 \| *2 1/2* | M 10 | | *482.214.09* | | | |
| Knot Wheel Brushes | 115 \| *4 1/2* | Bo. 22.2 \| *7/8* | | *472.211.09* | | *472.811.09* | |
| | 115 \| *4 1/2* | M 14 | | *472.217.09* | | | |
| Knot Bevel Brushes | 100 \| *4* | M 14 | | *471.257.09* | | | |
| | 115 \| *4 1/2* | M 14 | | *472.257.09* | | *472.857.09* | |
| Cup Brushes crimped | 60 \| *2 3/8* | M 14 | | | *421.367.09* | | *421.167.09* |
| | 60 \| *2 3/8* | M 10 | | | | | *421.164.09* |
| | 75 \| *3* | M 14 | | | | | *423.167.09* |
| Conical Brushes crimped | 100 \| *4* | M 14 | | | | | *422.177.09* |

## Brushes for Grinders and Drilling Machines with Shank 6 mm Ø in Blister Packaging

| | D | STH 0.35 \| *0.014"* | STH 0.50 \| *0.020"* | ROH 0.35 \| *0.014"* |
|---|---|---|---|---|
| | mm \| *inch* | Art.-No. | Art.-No. | Art.-No. |
| Knot End Brushes | 19 \| *3/4* | *453.278.09* | | |
| | 22 \| *7/8* | | | *454.378.09* |
| Knot Wheel Brushes | 75 \| *3* | | *417.198.09* | |

## D.I.Y. Brushes for Grinders and Drilling Machines with Shank 6 mm Ø in Blister Packaging

| | D | STA 0.25 \| *0.010"* | STA 0.30 \| *0.012"* | ROF 0.30 \| *0.012"* | MES 0.25 \| *0.010"* | SIC 80/1.2 |
|---|---|---|---|---|---|---|
| | mm \| *inch* | Art.-No. | 0.35 \| *0.014"* Art.-No. | Art.-No. | Art.-No. | Art.-No. |
| Wheel Brushes | 50 \| *2* | | *410.123.09* | | | |
| | 75 \| *3* | | *410.133.09* | *410.135.09* | *410.136.09* | *410.138.09* |
| | 100 \| *4* | *410.152.09* | *410.153.09* | | | *410.158.09* |
| Cup Brushes | 50 \| *2* | *430.122.09* | *430.123.09* | | *430.126.09* | *430.128.09* |
| | 75 \| *3* | *430.132.09* | *430.133.09* | | | *430.138.09* |
| End Brushes | 25 \| *1* | | *455.161.09* | | | |
| Cylinder Brushes | 28 \| *1* | | *541.301.09* | | | |

**Item Nos. in bold** are available ex stock.
Consider our minimum order value for *italic printed* article numbers (see page 139).

| | |
|---|---|
| **STA** | = steel wire, crimped |
| **STH** | = steel wire, high tensile, straight |
| **ROF** | = stainless steel wire |
| **ROH** | = stainless steel wire, high tensile, straight |
| **MES** | = brass wire |
| **PP** | = polypropylene |
| **SIC** | = brass wire |

## 1 Hanger assembly for tube brushes, PP black, with euro hole

| Interior Thread | Total length mm \| *inch* | Width mm \| *inch* | Height mm \| *inch* | Pack. | Art.-No. |
|---|---|---|---|---|---|
| M 6 | 135 \| *5* | 42 \| *1 5/8* | 2 \| *5/64* | 10 | **000.501** |
| M 10 | 135 \| *5* | 42 \| *1 5/8* | 2 \| *5/64* | 10 | **000.503** |
| W 3/8" | 135 \| *5* | 42 \| *1 5/8* | 2 \| *5/64* | 10 | **000.506** |
| W 1/2" | 135 \| *5* | 42 \| *1 5/8* | 2 \| *5/64* | 10 | **000.507** |

## 2 Brushes with thread, on hanger assembly

| | Diameter Brush | Total length Brush | Total length Brush | Thread Brush | Pack. | STA |
|---|---|---|---|---|---|---|
| | mm \| *inch* | mm \| *inch* | mm \| *inch* | | | Art.-No. |
| Tube Brushes | 20 \| *3/4* | 150 \| *6* | 100 \| *4* | 1/2" | 10 | *502.120.03* |
| | 30 \| *1 1/4* | 160 \| *6 1/4* | 100 \| *4* | 1/2" | 10 | *506.130.03* |
| | 35 \| *1 1/2* | 160 \| *6 1/4* | 100 \| *4* | 1/2" | 10 | *506.135.03* |
| | 40 \| *1 3/8* | 160 \| *6 1/4* | 100 \| *4* | 1/2" | 10 | *506.140.03* |
| | 50 \| *2* | 160 \| *6 1/4* | 100 \| *4* | 1/2" | 10 | *506.150.03* |
| | 63 \| *2 1/2* | 160 \| *6 1/4* | 100 \| *4* | 1/2" | 10 | *506.163.03* |
| | 75 \| *3* | 160 \| *6 1/4* | 100 \| *4* | 1/2" | 10 | *506.175.03* |
| | 101 \| *4* | 160 \| *6 1/4* | 100 \| *4* | 1/2" | 10 | *506.101.03* |
| Boiler Brushes | 40 x 80 \| *1 3/8 / 3* | 160 \| *6 1/4* | 100 \| *4* | 1/2" | 10 | *532.202.03* |
| | 50 x 100 \| *2 / 4* | 160 \| *6 1/4* | 100 \| *4* | 1/2" | 10 | *532.203.03* |

## 3 Brushes in Cut Cases

| | Pack. | Art.-No. |
|---|---|---|
| **Hand brushes STA** straight 0.35, 4 Rows | 10 | *100.041.CC* |
| **Hand brushes ROF** crimped 0.35, 4 Rows | 10 | *104.641.CC* |
| **Hand brushes MES** crimped 0.35, 4 Rows | 10 | *107.641.CC* |
| **Spark Plug Brushes MES** crimped 0.15, 3 Rows | 25 | *125.211.CC* |
| **Cup Brushes STA** crimped 0.35, Drm. 60, Gew. M 14 | 15 | *421.167.CC* |
| **Knot Conical Brushes STH** straight 0.50, Drm. 100, Gew. M 14 | 5 | *471.257.CC* |
| **Knot Wheel Brushes STH** straight 0.50, Drm. 115, Bo. 22,2 | 6 | *472.211.CC* |
| **Knot Cup Brushes STH** straight 0.50, Drm. 65, Gew. M 14 | 12 | *482.217.CC* |
| **Knot Cup Brushes STH** straight 0.50, Drm. 90, Gew. M 14 | 8 | *485.237.CC* |

# Sales Promotion

**Professionalism, service, quality...**
The LESSMANN Display units will make a good impression on your customers. They are not only good for your image but will also have a positive effect on promoting and increasing your brush sales. The comprehensive and at the same time clear presentation makes the customers choice much easier.

Take advantage of our experience and use this possibility that will lead to successful increased sales. Beside your special demands the most important thing to know is the branch where your most important customers come from and what their demands are. We have tried and tested variations of assortments for different kind of constellation. Please do not hesitate to contact us and we will arrange your individual programme. Because the production of high quality brushes is as important as having success with our products!

**1 | Self-service Wall 100 x 220 cm**
The most effective sales promotion for your LESSMANN brush assortment. Available with LESSMANN logo or Brush-Know-how label.

**2 | Individual mix for Success**
Products that fit in with the wishes of your (most important) customers and their main demand, arranged together with you and your customers. Your assortment can mainly consist of technical brushes or hand brushes.

**3 | Carton Packing**
All brushes for angle grinders in sales promoting single packing – stable and safe.

**4 | Hand Brushes with EAN Code**
All standard hand brushes (article no. 10x.xxx) with EAN code. Without extra charges for you!

**5 | Display boxes for Shank Brushes**
Available as a standard for all shank wheel brushes, cup brushes and end brushes with shank.

**6 | Brush-Know-how Flyer**
The most important brush applications of our brush assortment in length DIN with technical information and hints!

**7 | Hanger Assembly for tube brushes**
With this hanger with euro hole, brushes with thread can be presented.

**8 | Cut Cases**
Cut Cases for an easy solution of presenting products in large quantities.

**We will help you with the right choice of shelf**
On request we can arrange the right shelf solution for presenting your brushes!

**Small self-service wall**
A suitable alternative solution: A practical self-service wall with the measurements 67 x 180 cm.

**Little helps for orientation (labels)**
They give hints regarding brushes and their application. Available for following article groups: Hand brushes, brushes for drilling machines and brushes for angle grinders.

**Brush-Know-how Poster**
All important brush applications at first glance! Available as label 100 x 40 cm and as poster 40 x 60 cm. Ask us or our representatives!

**Private Label**
A good idea with different solution possibilities. Ask for your own brand!

**Sales promoting blister packing**
For all drilling machines and angle grinders.

**Take a look at quality**
All technical data and safety information as well as observation windows for recognising the brushes (e.g. green marking for stainless steel brushes).

**Stainless Steel Marking**
LESSMANN brushes with stainless steel wire can easily be recognised by green cups or side plates.

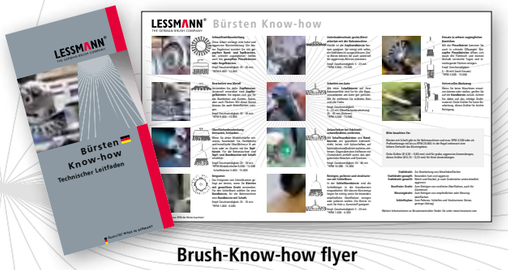


**Brush-Know-how flyer**
The most important brush application of our brush assortment in length DIN with technical information and hints!

Order now:
German version: Art.-No. **99BKHDEU**
English version: Art.-No. **99BKHENG**

**Cut Cases**
Cut Cases for an easy solution of presenting products in large quantities.

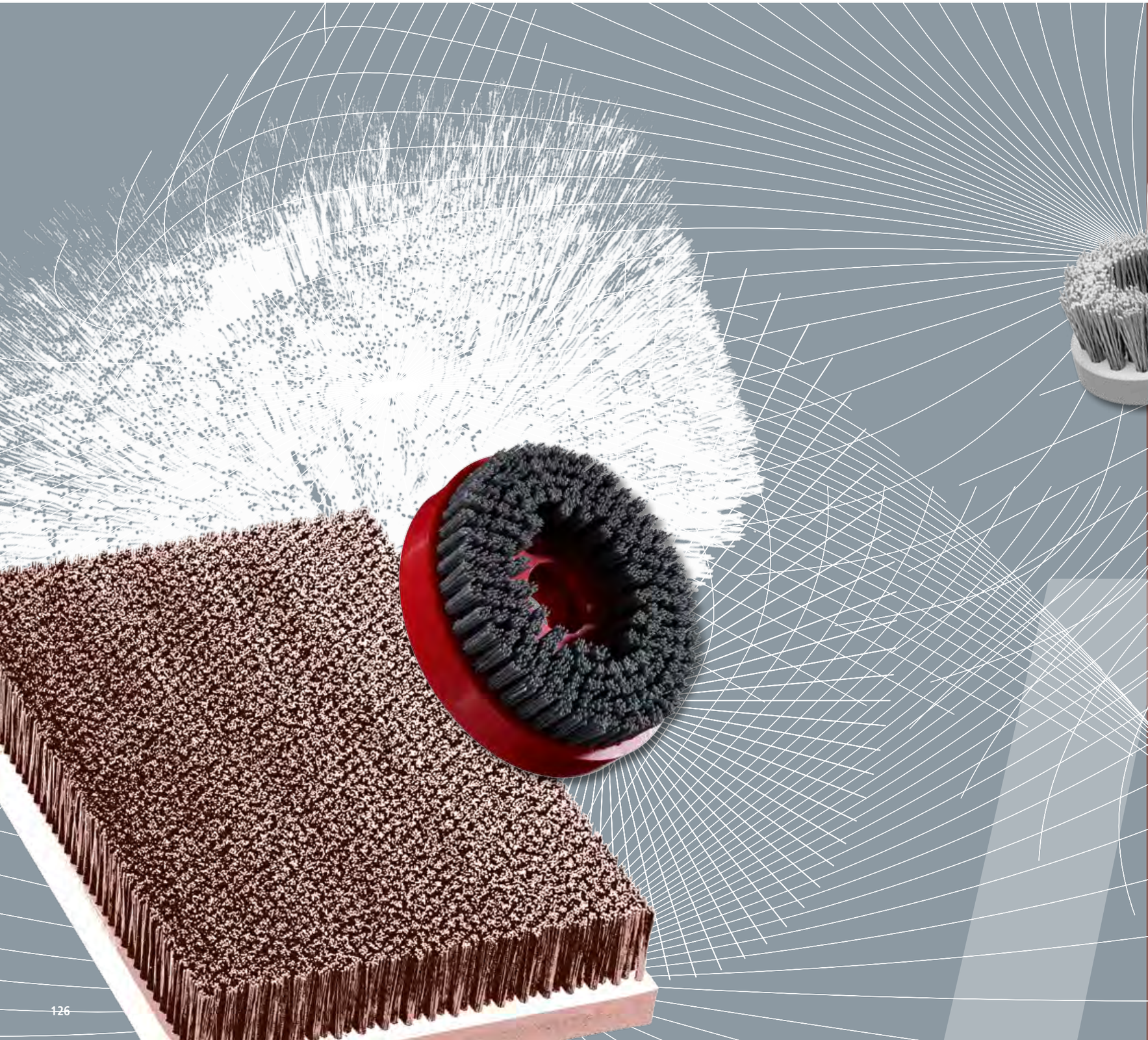

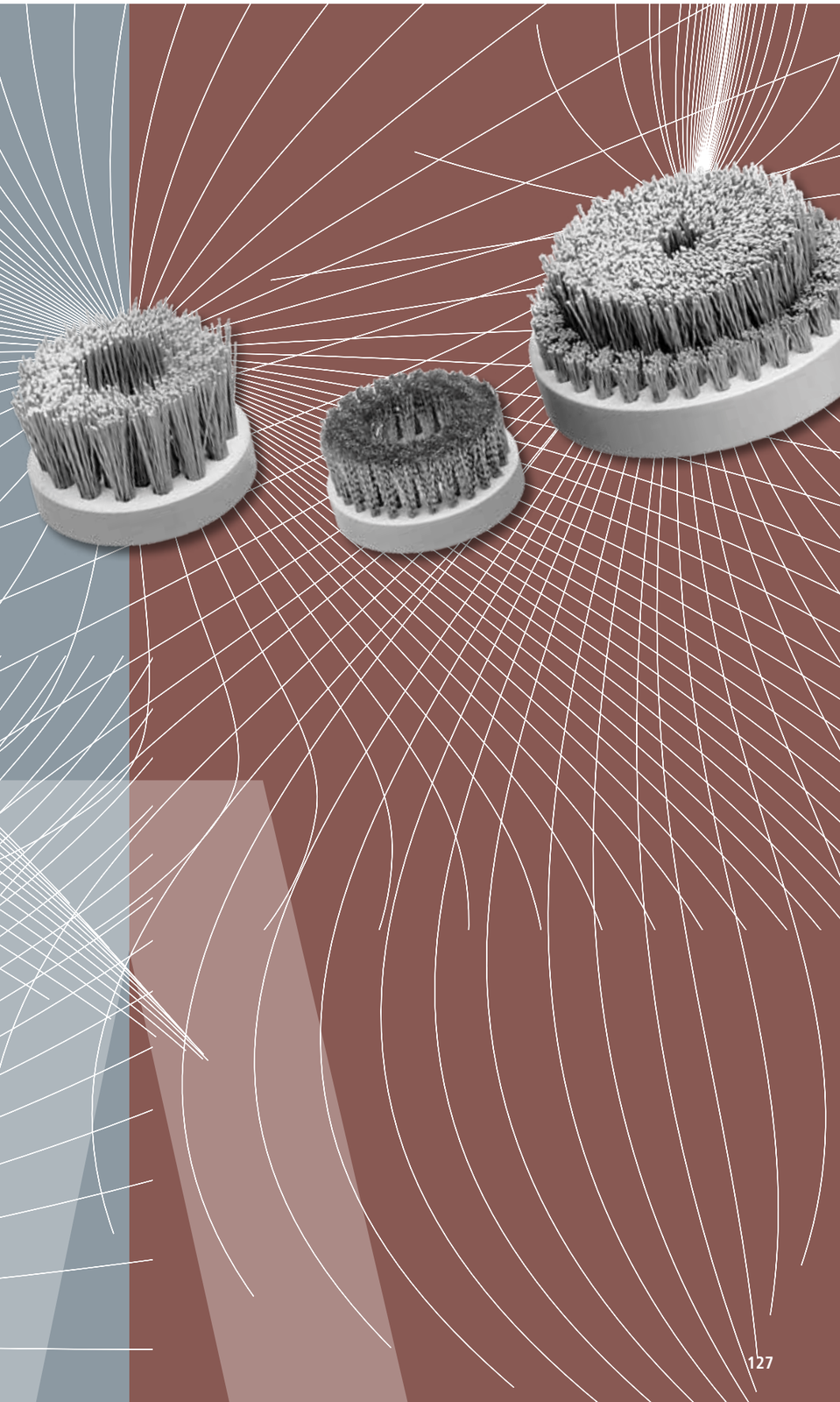

# Staple Set Brushes

**Staple Set Brushes**
For applications with little mechanic load, brushes in a staple set edition are produced. Typical applications are for example cleaning, transporting, sorting or moistening.

Depending on the requirements, the filling material can be fixed individually into the body. The distance of the bundles are variable and comply with the application.
As filling material next to different wires also fibres are available. Also mixed filament in various mixing proportions are possible.

LESSMANN produces staple set wheel and roller brushes with bore or arbour absorption, depending on the customers' specification. Disc Brushes usually are delivered with thread or bore.

Please inform yourself on the following pages and do not hesitate to contact us for personal advice!

# Disc Brushes

| Disc Brushes | | | |
|---|---|---|---|
| DA - External Diameter | KD - Body Height | BH - Filling Length | Deviation of the Bristles |
| mm | mm | mm | |
| min. 10, max. 800 | min. 10, max. 100 | min. 8 | max. 35° |
| | | max. 95 Steel | |
| | | max. 130 Plastic | |

**Body Material:** PP, PE, PA, Wood, Steel, Aluminium
**Filling Material:** STA, STM, MES, ROF, PP, PE, PA, FIB, ROS, SIC, AO

**Disc Brushes – for cleaning and deburring**
Disc Brushes are used for the treatment of plane surfaces on almost every material. The numerous variations of body and trimming materials and adapter systems make them for all purposes applicable.
For deburring working pieces, disc brushes can be inserted in individual equipments as well as in machining centres for removing secondary burrs.

**Disc Brushes for the wood machining industry**
Disc brushes used for the wood machining industry have a very long filling material (SIC). Used on angle grinders, the disc brushes are ideal for maintaining, cleaning, structuring or polishing wood.
The brushes are very effective when working on large surfaces.

**Circular Discs – Standard Body**
If your application allows the mentioned sizes, we recommend our standard bodies.

The inquiry form for disc brushes you find on page 131 or at www.lessmann.com

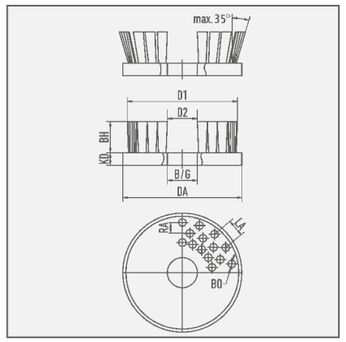


**Item Nos. in bold** are available ex stock.
Consider our minimum order value for *italic printed* article numbers (see page 139).

| | |
|---|---|
| **STA** | = steel wire |
| **STM** | = brass coated steel |
| **ROF** | = stainless steel wire |
| **MES** | = brass wire |
| **PP** | = polypropylene |
| **PA** | = polyamide |
| **PE** | = polyethylene |
| **FIB** | = fibre |
| **ROS** | = horse hair |
| **SIC** | = silicon carbide bristles |
| **AO** | = aluminium oxide bristles |

# Disc Brushes

## Disc Brushes

| | Filling | D mm \| *inch* | KD mm \| *inch* | Filling length mm \| *inch* | Bore/ Thread mm \| *inch* | RPM max. | Art.-No. |
|---|---|---|---|---|---|---|---|
| | **STA** 0.20 \| *0.008"* | 150 \| *6* | 25 \| *1* | 25 \| *1* | M 14 | 2,000 | **405.006** |
| | **SIC** 180/1.0 | 125 \| *5* | 25 \| *1* | 20 \| *3/4* | 22.2 \| *7/8* | 3,000 | *405.854* |
| | **SIC** 180/1.0 | 150 \| *6* | 25 \| *1* | 20 \| *3/4* | 25 \| *1* | 2,000 | *405.835* |
| | **SIC** 120/1.1 | 150 \| *6* | 25 \| *1* | 25 \| *1* | 25 \| *1* | 2,000 | *405.864* |
| 1 | **Mixed filament STA** 0.30 / **PA** 0.35 | 130 \| *5 1/8* | 25 \| *1* | 40 \| *1 3/8* | M 14 | 2,500 | *405.908* |
| 1 | **Mixed filament STA** 0.30 / **PA** 0.35 | 200 \| *8* | 25 \| *1* | 40 \| *1 3/8* | M 14 | 1,500 | *405.905* |

## 2 Disc Brushes for the wood machining

| Filling | D mm \| *inch* | KD mm \| *inch* | Filling length | Thread | RPM max. | Pack. | Art.-No. |
|---|---|---|---|---|---|---|---|
| **SIC** 46/1.6 | 130 \| *5 1/8* | 20 \| *3/4* | 50 \| *2* | M 14 | 2,500 | 1 | *405.843* |
| **SIC** 60/1.5 | 130 \| *5 1/8* | 20 \| *3/4* | 50 \| *2* | M 14 | 2,500 | 1 | *405.844* |
| **SIC** 80/1.2 | 130 \| *5 1/8* | 20 \| *3/4* | 50 \| *2* | M 14 | 2,500 | 1 | **405.845** |

## Circular Discs – Standard Body

| DA mm \| *inch* | KD mm \| *inch* | Bore B / Thread G | Body Material |
|---|---|---|---|
| 150 \| *6* | 25 \| *1* | Bore 12 | **PP** red |
| 150 \| *6* | 25 \| *1* | Bore 35 x 10.5 / 25, mounting hole 11 | **PP** red |
| 180 \| *7* | 18 \| *5/8* | Thread M 12 | **PP** red |
| 180 \| *7* | 18 \| *5/8* | Thread M 12 left | **PP** red |
| 200 \| *8* | 25 \| *1* | Bore 12 | **PP** red |
| 200 \| *8* | 25 \| *1* | Bore 35 x 10.5 / 25, mounting hole 11 | **PP** red |
| 220 \| *8 5/8* | 20 \| *3/4* | Bore 40 | **PP** red |

The standard bodies can be adapted on demand (dress to size, drill) for receiving other measurements.



# Enquiry for Circular Discs

**Drawing / description of application**

**Brush Application**
- ☐ deburring
- ☐ cleaning
- ☐ roughening / structuring
- ☐ others

**Material**
- ☐ steel
- ☐ aluminium
- ☐ wood
- ☐ stainless steel
- ☐ plastic
- ☐ others

**Filling material**
- ☐ steel
- ☐ brass coated steel
- ☐ brass
- ☐ stainless steel
- ☐ PP
- ☐ PA
- ☐ PE
- ☐ abrasive filament (SIC)
- ☐ abrasive filament (AO)
- ☐ fibre
- ☐ horsehair

**Diameter of filling material:**_____

**Body**
- ☐ PP
- ☐ PE
- ☐ PA
- ☐ wood
- ☐ steel
- ☐ aluminium

**Piece number:**_____

Please mention measurements according to drawing

DA external diameter_____ mm
B/G bore/thread _____ mm
KD body height _____ mm
BH trim height_____ mm
D1 dia trim outside _____ mm
D2 dia trim inside _____ mm
RA row distance _____ mm
LA hole distance _____ mm
BO bundle bore _____ mm

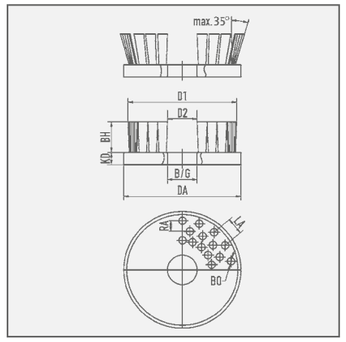


**sender:** company, contact person

**More information required?**
+49 9082 707-0
e-mail: info@lessmann.com

**Other requirement forms you find at www.lessmann.com**

## Please fax this form to: +49 9082 707-78

# Lath Brushes

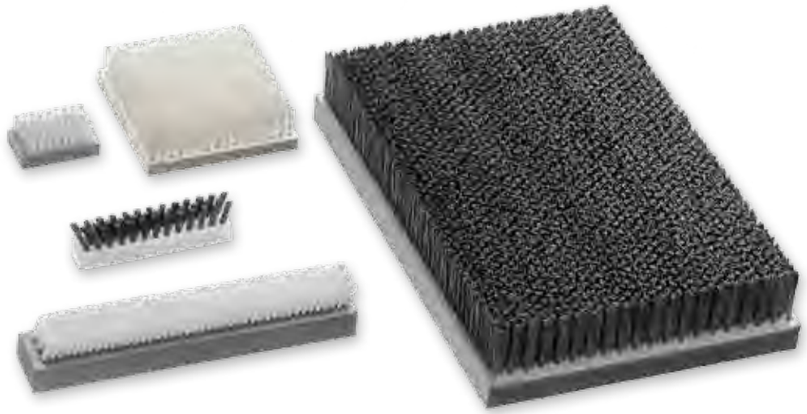

**Lath Brushes**

| Body Width | Total Length | KD - Body Size | BH - Trim Length | Deviation of the Bristles |
|---|---|---|---|---|
| mm | mm | mm | mm | |
| min. 8, max. 750 | max. 2.400 | min. 10, max. 100 | min. 8 | max. 35° |
| | | | max. 95 Steel | |
| | | | max. 130 Plastic | |

**Body Material:** PP, PE, PA, Wood, Steel, Aluminium
**Filling Material:** STA, STM, MES, ROF, PP, PE, PA, FIB, ROS, SIC, AO

**Lath Brushes**
They work in machines and are used for clearing, cleaning, insulating and discharging electric charges etc. Various body materials are possible: including wood, metal and plastic. The filling material can be manifold and goes from fine horsehair to firm steel wire. Through the deviation of the bristles until 35° the lath bushes are very flexible in their applications.

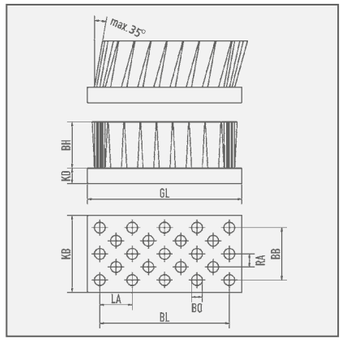


**Item Nos. in bold** are available ex stock.
Consider our minimum order value for *italic printed* article numbers (see page 139).

| | |
|---|---|
| **STA** | = steel wire |
| **STM** | = brass coated steel |
| **ROF** | = stainless steel wire |
| **MES** | = brass wire |
| **PP** | = polypropylene |
| **PA** | = polyamide |
| **PE** | = polyethylene |
| **FIB** | = fibre |
| **ROS** | = horse hair |
| **SIC** | = silicon carbide bristles |
| **AO** | = aluminium oxide bristles |



# Enquiry for Lath Brushes

**Drawing / description of application**

**Brush Application**
- ☐ deburring
- ☐ cleaning
- ☐ roughening / structuring
- ☐ others

**Material**
- ☐ steel
- ☐ aluminium
- ☐ wood
- ☐ stainless steel
- ☐ plastic
- ☐ others

**Filling material**
- ☐ steel
- ☐ brass coated steel
- ☐ brass
- ☐ stainless steel
- ☐ PP
- ☐ PA
- ☐ PE
- ☐ abrasive filament (SIC)
- ☐ abrasive filament (AO)
- ☐ fibre
- ☐ horsehair

**Diameter of filling material:**_____

**Body**
- ☐ PP
- ☐ PE
- ☐ PA
- ☐ wood
- ☐ steel
- ☐ aluminium

**Piece number:**_____

Please mention measurements according to drawing

GL total length _____ mm
KB total width _____ mm
KD body size _____ mm
BH trim height _____ mm
BL trim length _____ mm
BB trim width _____ mm
RA row distance _____ mm
LA hole distance _____ mm
BO bundle bore _____ mm

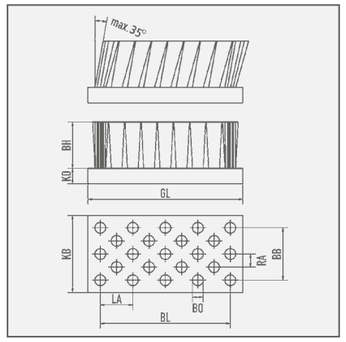


**sender: company, contact person**

**More information required?**
+49 9082 707-0
e-mail: info@lessmann.com

**Other requirement forms you find at www.lessmann.com**

## Please fax this form to: +49 9082 707-78

# Wheel Brushes and Wide Face Brushes

| Wheel Brushes and Wide Face Brushes | | | | |
|---|---|---|---|---|
| KD - Body Diameter | D - Total Diameter | GL - Total Width | BL - Trim Length | B - Bore |
| mm | mm | mm | mm | |
| min. 25, max. 250 | min. 45 | min. 5, max. 800 | min. 5, max. 780 | min. 5, max. 200 |
| | max. 440 Steel | | | |
| | max. 500 Plastic | | | |

**Body Material:** PP, PE, PA, Wood, Steel, Aluminium
**Filling Material:** STA, STM, MES, ROF, PP, PE, PA, FIB, ROS, SIC, AO

**Staple Set Wheel and Roller Brushes**
For work without a mechanical load on the brushes.
The brush body is of wood, aluminium or plastic. The filling material is determined by the brushes purpose. Please also consider temperature, chemical and mechanical characteristics during use.
The density of the filling material can be varied by the diameter and the distance of and from the hole.

The mentioned data in the chart should support you defining the right brush for your application. For further information or support do not hesitate to contact us by e-mail, phone or fax. We will be very pleased to support you.

LESSMANN produces staple set wheel and roller brushes with bore or arbor absorption, depending on the customers' specification. Please contact us for personal advice!

**Note:**
For applications which have a high mechanical load on the brushes we advise our wheel and roller brushes with crimped or knotted wire.

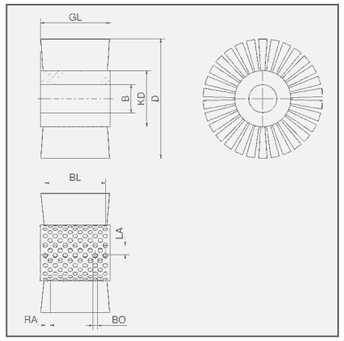


**Item Nos. in bold** are available ex stock.
Consider our minimum order value for *italic printed* article numbers (see page 139).

| | |
|---|---|
| STA | = steel wire |
| STM | = brass coated steel |
| ROF | = stainless steel wire |
| MES | = brass wire |
| PP | = polypropylene |
| PA | = polyamide |
| PE | = polyethylene |
| FIB | = fibre |
| ROS | = horse hair |
| SIC | = silicon carbide bristles |
| AO | = aluminium oxide bristles |



# Enquiry for Wheel Brushes / Wide Face Brushes



**Drawing / description of application**

**Brush Application**
- ☐ deburring
- ☐ cleaning
- ☐ roughening / structuring
- ☐ others

**Material**
- ☐ steel
- ☐ aluminium
- ☐ wood
- ☐ stainless steel
- ☐ plastic
- ☐ others

**Filling material**
- ☐ steel
- ☐ brass coated steel
- ☐ brass
- ☐ stainless steel
- ☐ PP
- ☐ PA
- ☐ PE
- ☐ abrasive filament (SIC)
- ☐ abrasive filament (AO)
- ☐ fibre
- ☐ horsehair

**Diameter of filling material:**_____

**Body**
- ☐ PP
- ☐ PE
- ☐ PA
- ☐ wood
- ☐ steel
- ☐ aluminium

**Piece number:**_____

Please mention measurements according to drawing

| | | | |
|---|---|---|---|
| GL | total length | _____ | mm |
| BL | filling length | _____ | mm |
| B | bore of axis | _____ | mm |
| KD | diameter of body | _____ | mm |
| D | total diameter | _____ | mm |
| RA | distance of rows | _____ | mm |
| LA | distance of holes | _____ | mm |
| BO | bore of bundle | _____ | mm |

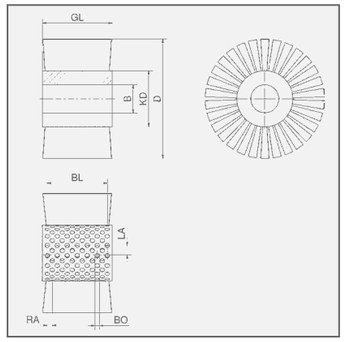


**sender: company, contact person**

**More information required?**
+49 9082 707-0
e-mail: info@lessmann.com

**Other requirement forms you find at www.lessmann.com**

## Please fax this form to: +49 9082 707-78

# Strip Brushes

**Strip Brushes**
Strip brushes are mainly used as cover in association with moving parts. They insulate doors and windows or help to keep moving parts on machines clean. There are many forms and profiles, with or without holders. Therefore, please indicate full measurements and holder details when ordering.
The profile can be made of steel, aluminium or plastic. The filling material can be bristles or steel wire (see pages 11 - 13).

**Brushes for deburring machines**
Special Strip Brushes as component part of deburring machines.

The inquiry form for strip brushes you find at www.lessmann.com

**Required measurements and data:**
GH total height
BH filling length
RB back width
shape of fixing

**Filling Material:**
STA, STM, MES, ROF, PP, PE, PA, FIB, ROS

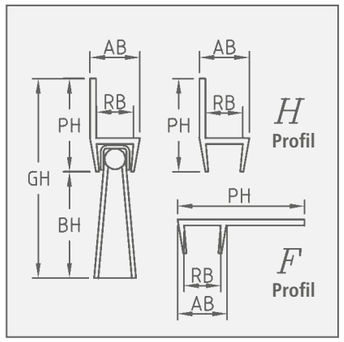


**Item Nos. in bold** are available ex stock.
Consider our minimum order value for *italic printed* article numbers (see page 139).

**STA** = steel wire
**STM** = brass coated steel
**ROF** = stainless steel wire
**MES** = brass wire
**PP** = polypropylene
**PA** = polyamide
**PE** = polyethylene
**FIB** = fibre
**ROS** = horse hair

**Strip Brushes with H profile, aluminium**

| mounting | GH mm \| *inch* | PH | BH mm \| *inch* | AB | RB | Total length mm \| *inch* | Pack. | **PA 0.30** \| *0.012"* Art.-No. | **Steel Wire** Art.-No. | **Horsehair** Art.-No. |
|---|---|---|---|---|---|---|---|---|---|---|
| H-Profile | 50 \| *2* | 25 | 25 \| *1* | 8 | 5 | 1,000 \| *40* | 5 | **052.881** | *051.360* | *051.021* |
| H-Profile | 90 \| *3 1/2* | 40 | 50 \| *2* | 12 | 8 | 1,000 \| *40* | 5 | **052.891** | available on demand | available on demand |
| H-Profile | 50 \| *2* | 25 | 25 \| *1* | 8 | 5 | 1,000 \| *40* | | available on demand | available on demand | available on demand |
| H-Profile | 90 \| *3 1/2* | 40 | 50 \| *2* | 12 | 8 | 1,000 \| *40* | | available on demand | available on demand | available on demand |
| H-Profile | 65 \| *2 1/2* | 40 | 25 \| *1* | 12 | 8 | 1,000 \| *40* | 5 | | *051.324* | |

**Strip Brushes for deburring machines**

| mounting | GH mm \| *inch* | BH mm \| *inch* | Total length mm \| *inch* | **PA 0.35** \| *0.014"* Art.-No. |
|---|---|---|---|---|
| Steel plate zinc coated | 40 \| *1 3/8* | 35 \| *1 1/2* | 500 \| *20* | *052.860* |
| Steel plate zinc coated | 40 \| *1 3/8* | 35 \| *1 1/2* | 600 \| *23 5/8* | *052.868* |

Other dimensions on inquiry.
You find an inquiry form for strip brushes on www.lessmann.com

# Article Numbers

**Art. No. Page**


000041 ... 37
000042 ... 37
000043 ... 37
000044 ... 37
000045 ... 37
000071 ... 113
000072 ... 113
000311 ... 87
000321 ... 87
000323 ... 87
000331 ... 87
000501 ... 123
000503 ... 123
000506 ... 123
000507 ... 123
000631 ... 37
000641 ... 37
000651 ... 37
000661 ... 37
000671 ... 37
00088663 ... 37
00088664 ... 37
00088665 ... 37
00088668 ... 37
00088832 ... 37
001211 ... 37
001212 ... 37
001215 ... 37
001222 ... 37
001225 ... 37
037101 ... 87
037200 ... 87
037201 ... 87
037221 ... 87
037710 ... 87
037921 ... 114
037922 ... 114
037923 ... 114
037924 ... 114
037925 ... 114
037927 ... 114
045301 ... 115
045910 ... 115
045915 ... 115
048081 ... 47
048241 ... 47
048271 ... 47
048291 ... 47
048441 ... 47
048471 ... 47
048491 ... 47
048701 ... 47
048821 ... 47
048841 ... 47
048851 ... 47
048901 ... 47
048941 ... 47
048998 ... 47
048999 ... 47
051021 ... 137
051324 ... 137
051360 ... 137
052860 ... 137
052868 ... 137
052881 ... 137
052891 ... 137
056001 ... 81
056301 ... 81
056501 ... 81
056701 ... 81
061101 ... 87
064050 ... 87
100011 ... 79
100020 ... 79
100021 ... 79
100030 ... 79
100031 ... 79
100040 ... 79
100041 ... 79
100041CC ... 123
100050 ... 79
100051 ... 79
100061 ... 79
102431 ... 79
102441 ... 79
102611 ... 79
102621 ... 79
102631 ... 79
102641 ... 79
102651 ... 79
102661 ... 79
103711 ... 79
103721 ... 79
103731 ... 79
103741 ... 79
103751 ... 79
103761 ... 79
104321 ... 79
104331 ... 79
104341 ... 79
104351 ... 79
104421 ... 79
104431 ... 79
104441 ... 79
104451 ... 79
104611 ... 79
104621 ... 79
104630 ... 79
104631 ... 79
104640 ... 79
104641 ... 79
104641CC ... 123
104651 ... 79
104661 ... 79
105420 ... 79
105421 ... 79
105431 ... 79
105440 ... 79
105441 ... 79
105451 ... 79
105461 ... 79
105721 ... 79
105731 ... 79
105741 ... 79
106621 ... 79
106631 ... 79
106641 ... 79
106651 ... 79
107321 ... 79
107331 ... 79
107341 ... 79
107351 ... 79
107411 ... 79
107421 ... 79
107431 ... 79
107441 ... 79
107451 ... 79
107461 ... 79
107611 ... 79
107621 ... 79
107631 ... 79
107641 ... 79
107641CC ... 123
107651 ... 79
107661 ... 79
108331 ... 79
108341 ... 79
108351 ... 79
109431 ... 79
109441 ... 79
109451 ... 79
109741 ... 79
120401 ... 81
120412 ... 81
120601 ... 81
120801 ... 81
120811 ... 81
120831 ... 81
121111 ... 86
121211 ... 86
122401 ... 81
122801 ... 81
122821 ... 81
124101 ... 91
124121 ... 91
124201 ... 91
124301 ... 91
124401 ... 91
124801 ... 91
125111 ... 82
125201 ... 82
125211 ... 82
125211CC ... 123
125221 ... 82
125231 ... 82
125234 ... 82
125241 ... 82
125251 ... 82
125311 ... 82
125511 ... 82
125521 ... 82
126311 ... 83
126401 ... 83
126411 ... 83
126431 ... 83
126441 ... 83
126451 ... 83
126472 ... 83
126481 ... 83
126511 ... 83
126611 ... 83
126811 ... 83
132701 ... 83
132801 ... 82
136101 ... 81
136102 ... 81
136103 ... 81
137701 ... 83
138704 ... 83
138705 ... 83
140201 ... 85
140641 ... 85
140811 ... 85
140901 ... 85
141231 ... 85
141421 ... 85
142101 ... 87
142211 ... 87
144001 ... 86
144011 ... 86
144021 ... 86
144111 ... 86
144121 ... 86
144211 ... 86
144311 ... 86
144411 ... 86
144701 ... 86
144801 ... 86
146101 ... 89
146201 ... 89
146241 ... 89
146301 ... 89
146341 ... 89
147101 ... 89
147200 ... 89
147201 ... 89
147261 ... 89
147301 ... 89
147401 ... 89
148101 ... 89
148141 ... 89
148161 ... 89
148201 ... 89
148601 ... 89
151108 ... 93
151109 ... 93
151511 ... 93
15199107 ... 93
15199507 ... 93
152510 ... 93
152811 ... 85
15299507 ... 93
182001 ... 82
182152 ... 83
182162 ... 83
182172 ... 83
182331 ... 82
182401 ... 80
182411 ... 80
182421 ... 80
182431 ... 80
182451 ... 80
182807 ... 83
182811 ... 83
183704 ... 83
183706 ... 83
184101 ... 115
184104 ... 115
185121 ... 80
185131 ... 80
185141 ... 80
185151 ... 80
185421 ... 80
185431 ... 80
185441 ... 80
185451 ... 80
185621 ... 80
185631 ... 80
185641 ... 80
185651 ... 80
185811 ... 81
186431 ... 80
300091 ... 35
300102 ... 118
300742 ... 35
300771KG ... 23
30121310 ... 35
30121315 ... 35
30121320 ... 35
30121330 ... 35
30121415 ... 35
30121420 ... 35
30121430 ... 35
30122515 ... 35
30122520 ... 35
30122525 ... 35
30122530 ... 35
30123620 ... 35
30123630 ... 35
30436114 ... 57
30476114 ... 57
310141 ... 26
310161 ... 26
310341 ... 27
310361 ... 27
31070206 ... 35
310841 ... 25
310851 ... 25
310871 ... 25
31174201 ... 35
311762 ... 35
312141 ... 35
312142 ... 29
312143 ... 29
312162 ... 29
312163 ... 29
312342 ... 30
312362 ... 30
312363 ... 30
312542 ... 31
312543 ... 31
312562 ... 31
312563 ... 31
320001 ... 35
320003 ... 35
320004 ... 35
320061 ... 35
320102 ... 118
320141 ... 26
320161 ... 26
32016112 ... 35
320341 ... 27
32034119 ... 33
320361 ... 27
32070319 ... 33
320707 ... 26
320821 ... 25
32082119 ... 33
320841 ... 25
320851 ... 25
320871 ... 25
323002 ... 35
323132 ... 29
323133 ... 29
323142 ... 29
323143 ... 29
323162 ... 29
323163 ... 29
32330519 ... 33
323342 ... 30
323343 ... 30
32334819 ... 33
323362 ... 30
323363 ... 30
323542 ... 31
323543 ... 31
323562 ... 31
323563 ... 31
32370419 ... 33
32370519 ... 33
32377013 ... 33
32380519 ... 33
32381013 ... 33
32382013 ... 33
32382819 ... 33
32383013 ... 33
32390010 ... 33
330001 ... 35
330141 ... 26
330161 ... 26
330341 ... 27
330361 ... 27
330821 ... 25
330841 ... 25
330851 ... 25
330871 ... 25
331161 ... 26
331361 ... 27
334132 ... 29
334142 ... 29
334143 ... 29
334162 ... 29
334163 ... 29
334342 ... 30
334343 ... 30
334362 ... 30
334363 ... 30
334542 ... 31
334543 ... 31
334562 ... 31
33536114 ... 57
33576114 ... 57
340141 ... 26
340161 ... 26
340341 ... 27
340361 ... 27
340707 ... 26
340821 ... 25
340831 ... 25
340841 ... 25
340851 ... 25
340871 ... 25
344132 ... 29
344133 ... 29
344142 ... 29
344143 ... 29
344172 ... 29
344173 ... 29
344342 ... 30
344362 ... 30
344363 ... 30
344542 ... 31
344543 ... 31
344562 ... 31
344563 ... 31
345051 ... 35
345132 ... 29
345133 ... 29
345142 ... 29
345143 ... 29
345162 ... 29
345163 ... 29
345342 ... 30
345343 ... 30
345362 ... 30
345363 ... 30
345542 ... 31
345543 ... 31
345562 ... 31
345563 ... 31
345762 ... 29
350141 ... 26
350161 ... 26
350341 ... 27
350361 ... 27
350821 ... 25
350831 ... 25
350841 ... 25
350851 ... 25
350871 ... 25
351141 ... 26
351161 ... 26
351341 ... 27
351361 ... 27
351707 ... 26
351771KG ... 23
351841 ... 25
351851 ... 25
351871 ... 25
355133 ... 29
355142 ... 29
355143 ... 29
355162 ... 29
355163 ... 29
355342 ... 30
355362 ... 30
355363 ... 30
355542 ... 31
355543 ... 31
355562 ... 31
355563 ... 31
355762 ... 29
35E136 ... 35
35E336 ... 35
35E146 ... 35
35E347 ... 35
35E357 ... 35
35E877 ... 35
360141 ... 26
360161 ... 26
360341 ... 27
360361 ... 27
360831 ... 25
360841 ... 25
360851 ... 25
360871 ... 25
361141 ... 26
361161 ... 26
361341 ... 27
361361 ... 27
361831 ... 25
361841 ... 25
361851 ... 25
361871 ... 25
362141 ... 26
362161 ... 26
362272 ... 26
362341 ... 27
362361 ... 27
362707 ... 26
362841 ... 25
362851 ... 25
362852 ... 25
362871 ... 25
365132 ... 29
365133 ... 29
365142 ... 29
365143 ... 29
365172 ... 29
365173 ... 29
365342 ... 30
365343 ... 30
365362 ... 30
365363 ... 30
365542 ... 31
365543 ... 31
365562 ... 31
365563 ... 31
366142 ... 29
366143 ... 29
366162 ... 29
366163 ... 29
366342 ... 30
366343 ... 30
366362 ... 30
366363 ... 30
366542 ... 31
366543 ... 31
366562 ... 31
366563 ... 31
366762 ... 29
36E146 ... 35
36E176 ... 35
36E847 ... 35
36E877 ... 35
370141 ... 26
370161 ... 26
370241KG ... 42
370242KG ... 42
370271KG ... 42
370272 ... 26
370272KG ... 42
370341 ... 27
370361 ... 27
370441KG ... 42
370442KG ... 42
370471KG ... 42
370472KG ... 42
370841 ... 25
370851 ... 25
370852 ... 25
370871 ... 25
371141 ... 26
371161 ... 26
371341 ... 27
371361 ... 27
371841 ... 25
371851 ... 25
371871 ... 25
372831 ... 25
372841 ... 25
372851 ... 25
372871 ... 25
376142 ... 29
376162 ... 29
376163 ... 29
376342 ... 30
376343 ... 30
376362 ... 30
376363 ... 30
376542 ... 31
376562 ... 31
377043 ... 41
37704300 ... 41
377043T1 ... 41
377043TA ... 41
377044 ... 42
37704400 ... 42
377044T1 ... 42
377044TA ... 42
377045 ... 41
377047 ... 42
377048 ... 41
377049 ... 42
377051 ... 41
37705100 ... 41
377051T1 ... 41
377051TA ... 41
377052 ... 41
377053 ... 41
37705300 ... 41
377053T1 ... 41
377053TA ... 41
377054 ... 41
37705400 ... 41
377054T1 ... 41
377054TA ... 41
377059 ... 41
377063 ... 41
37706300 ... 41
377063T1 ... 41
377063TA ... 41
377066 ... 41
377077 ... 41
377089 ... 42
37708900 ... 42
377089T1 ... 42
377089TA ... 42
377090 ... 42
377091 ... 43
37709100 ... 43
377093 ... 42
377094 ... 42
37709400 ... 42
377094T1 ... 42
377094TA ... 42
377095 ... 41
377096 ... 41
377097 ... 42
377099 ... 42
377142 ... 29
377143 ... 29
377144 ... 29
377162 ... 29
377163 ... 29
377164 ... 29
37724030 ... 45
37724046 ... 45
37724060 ... 45
37727030 ... 45
37727046 ... 45
37727060 ... 45
37729030 ... 45
37729046 ... 45
37729060 ... 45
377342 ... 30
377343 ... 30
377362 ... 30
377363 ... 30
37744030 ... 45
37744046 ... 45
37744060 ... 45
37747030 ... 45
37747046 ... 45
37747060 ... 45
37749030 ... 45
37749046 ... 45
37749060 ... 45
377562 ... 31
377707 ... 42
37770700 ... 42
377707T1 ... 42
377707TA ... 42
377762 ... 29
37778030 ... 45
37778046 ... 45
37778060 ... 45
377824 ... 43
37782400 ... 43
377824T1 ... 43
377824TA ... 43
37783030 ... 45
37783046 ... 45
37783060 ... 45
377835 ... 43
37783500 ... 43
377835T1 ... 43
377835TA ... 43
377837 ... 43
377839 ... 43
377854 ... 43
37785400 ... 43
377854T1 ... 43
377854TA ... 43
377875 ... 43
37787500 ... 43
377875T1 ... 43
377875TA ... 43
37E137 ... 35
37E147 ... 35
37E336 ... 35
380141 ... 26
380161 ... 26
380341 ... 27
380361 ... 27
380841 ... 25
380851 ... 25
380871 ... 25
381161 ... 26
381361 ... 27
381831 ... 25
381841 ... 25
381851 ... 25
381871 ... 25
387051 ... 41
387053 ... 41
387054 ... 41
387055 ... 41
387142 ... 29
387143 ... 29
387162 ... 29
387163 ... 29
38724046 ... 45
38727046 ... 45
38729046 ... 45
387342 ... 30
387343 ... 30
387362 ... 30
387363 ... 30
38744046 ... 45
38747046 ... 45
38749046 ... 45
387562 ... 31
38778046 ... 45
387824 ... 43
38783046 ... 45
38824046 ... 45
38824060 ... 45
38827046 ... 45
38827060 ... 45
38829046 ... 45
38829060 ... 45
38844046 ... 45
38844060 ... 45
38847046 ... 45
38847060 ... 45
38849046 ... 45
38849060 ... 45
38878046 ... 45
38878060 ... 45
38883046 ... 45
38883060 ... 45


**Art. No. Page**


38T841 ... 25
38T851 ... 25
397142 ... 29
397143 ... 29
397172 ... 29
397173 ... 29
397362 ... 30
397562 ... 31
402880 ... 33
402881 ... 33
402882 ... 33
402883 ... 33
402890 ... 33
402891 ... 33
402892 ... 33
402893 ... 33
405006 ... 130
405835 ... 130
405843 ... 33
405844 ... 33
405845 ... 33
405854 ... 130
405864 ... 130
405905 ... 130
405908 ... 130
408819DB ... 35
408829DB ... 35
408839DB ... 35
410001SB ... 75
410001WB ... 75
410001ZH ... 75
410002SB ... 75
410002WB ... 75
410002ZH ... 75
410003SB ... 75
410003WB ... 75
410003ZH ... 75
410031 ... 75
410032 ... 75
410033 ... 75
410122 ... 119
410123 ... 119
41012307 ... 121
41012309 ... 122
410132 ... 119
410133 ... 119
41013307 ... 121
41013309 ... 122
410134 ... 119
410135 ... 119
41013509 ... 122
410136 ... 119
41013607 ... 121
41013609 ... 122
410138 ... 119
41013807 ... 121
41013809 ... 122
410139 ... 119
410152 ... 119
41015209 ... 122
410153 ... 119
41015307 ... 121
41015309 ... 122
410154 ... 119
410155 ... 119
410156 ... 119
410158 ... 119
41015807 ... 121
41015809 ... 122
410159 ... 119
410173 ... 119
410183 ... 119
410185 ... 119
410221 ... 75
410222 ... 75
410223 ... 75
410321 ... 75
410322 ... 75
410323 ... 75
410521 ... 75
410522 ... 75
410523 ... 75
410801 ... 75
410802 ... 75
410803 ... 75
410811DB ... 75
410812DB ... 75
410813DB ... 75
410871 ... 75
410871A0 ... 75
410872 ... 75
410872A0 ... 75
410873 ... 75
410873A0 ... 75
410881 ... 75
410882 ... 75
410883 ... 75
410891 ... 75
410891A0 ... 75
410892 ... 75
410892A0 ... 75
410893 ... 75
410893A0 ... 75
411132 ... 64
411142 ... 64
411342 ... 65
411542 ... 65
413132 ... 64
413133 ... 64
413142 ... 64
413143 ... 64
413162 ... 64
413163 ... 64
413342 ... 65
413343 ... 65
413362 ... 65
413363 ... 65
413542 ... 65
413543 ... 65
413841 ... 65
413871 ... 65
414132 ... 64
414133 ... 64
414142 ... 64
414143 ... 64
414162 ... 64
414163 ... 64
414192 ... 64
414193 ... 64
414342 ... 65
414343 ... 65
414362 ... 65
414542 ... 65
414543 ... 65
414752 ... 64
415132 ... 64
415133 ... 64
415142 ... 64
415143 ... 64
415160 ... 63
415162 ... 64
415163 ... 64
415192 ... 64
415193 ... 64
415301 ... 65
415302 ... 65
415342 ... 65
415343 ... 65
415362 ... 65
415363 ... 65
415542 ... 65
415543 ... 65
415752 ... 64
415842 ... 65
415852 ... 65
415872 ... 65
416132 ... 64
416133 ... 64
416142 ... 64
416143 ... 64
416160 ... 63
416162 ... 64
416163 ... 64
416193 ... 64
416302 ... 65
416303 ... 65
416342 ... 65
416343 ... 65
416362 ... 65
416363 ... 65
416542 ... 65
416543 ... 65
416752 ... 64
417132 ... 64
417133 ... 64
417142 ... 64
417143 ... 64
417160 ... 63
417162 ... 64
417163 ... 64
417168 ... 63
417192 ... 64
417196 ... 64
417198 ... 63
41719807 ... 121
41719809 ... 122
41719811 ... 63
417199 ... 63
417306 ... 65
417309 ... 65
417342 ... 65
417343 ... 65
417362 ... 65
417363 ... 65
417398 ... 63
417399 ... 63
417542 ... 65
417543 ... 65
417752 ... 64
417842 ... 65
417852 ... 65
417872 ... 65
418142 ... 64
418143 ... 64
418162 ... 64
418163 ... 64
418192 ... 64
418342 ... 65
418343 ... 65
418362 ... 65
418363 ... 65
418542 ... 65
418543 ... 65
418704 ... 64
418752 ... 64
418803 ... 64
418842 ... 65
418872 ... 65
421147 ... 54
421164 ... 54
42116409 ... 122
421167 ... 54
42116707 ... 121
42116709 ... 122
421167CC ... 123
421197 ... 54
421364 ... 54
421367 ... 54
42136709 ... 122
421564 ... 54
421567 ... 54
421767 ... 54
421827 ... 54
421857 ... 54
422177 ... 57
42217709 ... 122
422367 ... 57
422767 ... 57
423167 ... 54
42316709 ... 122
423168 ... 54
423367 ... 54
423368 ... 54
424147 ... 54
424171 ... 54
424177 ... 54
424178 ... 54
424197 ... 54
424198 ... 54
424361 ... 54
424367 ... 54
424368 ... 54
424567 ... 54
426147 ... 54
426171 ... 54
426177 ... 54
426178 ... 54
426191 ... 54
426197 ... 54
426198 ... 54
426361 ... 54
426367 ... 54
426368 ... 54
426561 ... 54
426567 ... 54
426568 ... 54
426701 ... 54
426707 ... 54
426767 ... 54
427171 ... 54
427177 ... 54
427178 ... 54
427297 ... 54
427298 ... 54
427367 ... 54
427567 ... 54
429171 ... 54
429177 ... 54
429178 ... 54
429191 ... 54
429197 ... 54
429198 ... 54
429367 ... 54
430001WB ... 75
430001SB ... 75
430001ZH ... 75
430002WB ... 75
430002SB ... 75
430002ZH ... 75
430031 ... 75
430032 ... 75
430122 ... 119
43012209 ... 122
430123 ... 119
43012307 ... 121
43012309 ... 122
430124 ... 119
430125 ... 119
430126 ... 119
43012607 ... 121
43012609 ... 122
430128 ... 67
43012807 ... 121
43012809 ... 122
430129 ... 67
430132 ... 119
43013209 ... 122
430133 ... 119
43013307 ... 121
43013309 ... 122
430134 ... 119
430135 ... 119
430136 ... 119
430138 ... 67
43013807 ... 121
43013809 ... 122
430139 ... 67
430222 ... 75
430223 ... 75
430322 ... 75
430323 ... 75
430522 ... 75
430523 ... 75
430802 ... 75
430803 ... 75
430812DB ... 75
430813DB ... 75
430872 ... 75
430872A0 ... 75
430873 ... 75
430873A0 ... 75
430882 ... 75
430892A0 ... 75
430883 ... 75
430892 ... 75
430893 ... 75
430893A0 ... 75
434142 ... 67
434162 ... 67
434342 ... 67
434345 ... 67
434355 ... 67
434362 ... 67
434365 ... 67
434542 ... 67
435142 ... 67
435162 ... 67
435342 ... 67
435345 ... 67
435355 ... 67
435362 ... 67
435365 ... 67
435542 ... 67
435562 ... 67
436162 ... 67
436362 ... 67
437142 ... 67
437162 ... 67
437342 ... 67
437362 ... 67
437542 ... 67
446271 ... 55
446277 ... 55
446701 ... 55
446771 ... 55
446777 ... 55
446827 ... 55
446851 ... 55
446857 ... 55
447277 ... 55
447827 ... 55
447857 ... 55
450001SB ... 75
450001WB ... 75
450001ZH ... 75
450031 ... 75
450221 ... 75
450311 ... 75
450521 ... 75
450801 ... 75
450821DB ... 75
450871 ... 75
450871A0 ... 75
450881 ... 75
450891 ... 75
450891A0 ... 75
451131 ... 70
451141 ... 70
451160 ... 69
451161 ... 70
451162 ... 70
451191 ... 70
451192 ... 70
451258 ... 73
451261BD ... 70
451278 ... 73
451341 ... 71
451361 ... 71
451362 ... 71
451458 ... 73
451478 ... 73
451541 ... 71
451561 ... 71
451831 ... 71
451851 ... 71
451871 ... 71
452131 ... 70
452141 ... 70
452160 ... 69
452161 ... 70
452191 ... 70
452261BD ... 70
452278GH ... 73
452341 ... 71
452361 ... 71
452541 ... 71
452561 ... 71
452703 ... 70
452705 ... 70
452751 ... 70
452831 ... 71
452851 ... 71
453131 ... 70
453141 ... 70
453160 ... 69
453161 ... 70
453163 ... 70
453191 ... 70
453258 ... 73
453261BD ... 70
453278 ... 73
45327809 ... 122
453298 ... 73
453338 ... 73
453341 ... 71
453358 ... 73
453361 ... 71
453363 ... 71
453378 ... 73
453541 ... 71
453561 ... 71
453703 ... 70
453705 ... 70
453751 ... 70
453758 ... 73
453821 ... 118
454238 ... 73
454258 ... 73
454278 ... 73
454298 ... 73
454338 ... 73
454358 ... 73
454378 ... 73
45437809 ... 122
454398 ... 73
454758 ... 73
454831 ... 71
454851 ... 71
454871 ... 71
455161 ... 118
45516107 ... 121
45516109 ... 122
456131 ... 70
456141 ... 70
456160 ... 69
456161 ... 70
456163 ... 70
456191 ... 70
456258 ... 73
456261BD ... 70
456278 ... 73
456298 ... 73
456338 ... 73
456341 ... 71
456358 ... 73
456361 ... 71
456378 ... 73
456398 ... 73
456541 ... 71
456561 ... 71
456703 ... 70
456705 ... 70
456751 ... 70
456758 ... 73
456831 ... 71
456851 ... 71
456871 ... 71
458131 ... 70
458141 ... 70
458161 ... 70
458191 ... 70
458341 ... 71
458361 ... 71
458541 ... 71
458561 ... 71
460121 ... 69
460122 ... 69
466171 ... 69
466172 ... 69
469131 ... 69
469133 ... 69
469151 ... 69
469153 ... 69
469362 ... 69
470111 ... 17
470211 ... 17
471117 ... 17
47112K ... 18
47113K ... 18
47114K ... 18
471157 ... 57
471157SM ... 57
47120728 ... 21
47120828 ... 21
471217 ... 17
47122K ... 18
47123K ... 18
47124K ... 18
471251 ... 57
471254 ... 57
471257 ... 57
47125707 ... 121
47125709 ... 122
471257CC ... 123
47172K ... 18
47173K ... 18
47174K ... 18
471757 ... 57
47180728 ... 22
47180828 ... 22
471817 ... 17
47182K ... 18
47183K ... 18
47184K ... 18
471857 ... 57
472111 ... 17
472117 ... 17
47212K ... 18
47213K ... 18
47214K ... 18
472157 ... 57
47220132 ... 21
47220139 ... 21
472201EZ ... 21
47220732 ... 21
47220832 ... 21
472211 ... 17
472211SM ... 17
47221107 ... 121
47221109 ... 122
472211CC ... 123
472211WZ ... 17
472217 ... 17
47221709 ... 122
47222K ... 18
47223K ... 18
47224K ... 18
472251 ... 57
472257 ... 57
47225709 ... 122
472257SM ... 57
472257V4 ... 57
472257WZ ... 57
472711 ... 17
472717 ... 17
47272K ... 18
47273K ... 18
47274K ... 18
472757 ... 57
47280132 ... 22
47280139 ... 22
472801EZ ... 22
47280732 ... 22
47280832 ... 22
472811 ... 17
47281109 ... 122
472811WZ ... 17
472817 ... 17
47282K ... 18
47283K ... 18
47284K ... 18
472857 ... 57
47285709 ... 122
472857WZ ... 57
473111 ... 17
473117 ... 17
47312K ... 18
47313K ... 18
47314K ... 18
47320140 ... 21
473201EZ ... 21
47320740 ... 21
47320840 ... 21
473211 ... 17
47321124 ... 17
473211SM ... 17
473211WZ ... 17
473217 ... 17
473217WZ ... 17
47322K ... 18
47323K ... 18
47324K ... 18
47372K ... 18
47373K ... 18
47374K ... 18
473257 ... 57
473711 ... 17
47380140 ... 22
473801EZ ... 22
47380740 ... 22
47380840 ... 22
473811 ... 17
473811WZ ... 17
473817 ... 17
47382K ... 18
47383K ... 18
47384K ... 18
474111 ... 17
474117 ... 17
47412K ... 18
47413K ... 18
47414K ... 18
47420148 ... 21
47420748 ... 21
47420848 ... 21
474211 ... 17
474217 ... 17
47422K ... 18
47423K ... 18
47424K ... 18
474311 ... 17
474317 ... 17
47472K ... 18
47473K ... 18
47474K ... 18
47480148 ... 22
47480748 ... 22
47480848 ... 22
474811 ... 17
474817 ... 17
47482K ... 18
47483K ... 18
47484K ... 18
475111 ... 17
475117 ... 17
47512K ... 18
47513K ... 18
47514K ... 18
47520148 ... 21
47520156 ... 21
47520176 ... 21
475201EZ ... 21
47520748 ... 21
47520756 ... 21
47520776 ... 21
47520848 ... 21
47520856 ... 21
47520876 ... 21
475211 ... 17
475217 ... 17
47522K ... 18
47523K ... 18
47524K ... 18
47525001 ... 59
47525101 ... 59
47526001 ... 59
47526101 ... 59
4752B176 ... 23
4752W176 ... 23
475311 ... 17
475317 ... 17
47572K ... 18
47573K ... 18
47574K ... 18
47580148 ... 22
47580156 ... 22
47580176 ... 22
47580748 ... 22
47580756 ... 22
47580776 ... 22
47580848 ... 22
47580856 ... 22
47580876 ... 22
475811 ... 17
475817 ... 17
47582K ... 18
47583K ... 18
47584K ... 18
476111 ... 17
47612K ... 18
47613K ... 18
47614K ... 18
47621051 ... 17
476211 ... 17
47622K ... 18
47623K ... 18
47624K ... 18
47625001 ... 59
476250SM ... 59
47625101 ... 59
476251SM ... 59
47626001 ... 59
47626101 ... 59
476311 ... 17
47672K ... 18
47673K ... 18
47674K ... 18
47682K ... 18
47683K ... 18
47684K ... 18
47712K ... 18
47713K ... 18

**Art. No. Page**

47714K ..... 18
47721075..... 17
47722K ..... 18
47723K ..... 18
47724K ..... 18
47726001..... 59
47726101..... 59
47731075..... 17
47772K ..... 18
47773K ..... 18
47774K ..... 18
47782K ..... 18
47783K ..... 18
47784K ..... 18
47812K ..... 18
47813K ..... 18
47814K ..... 18
47820006..... 19
47820008..... 19
47820010..... 19
47821075..... 17
47822506..... 19
47822508..... 19
47822510..... 19
47822K ..... 18
47823K ..... 18
47824K ..... 18
47826001..... 59
47830006..... 19
47830008..... 19
47830010..... 19
47831075..... 17
47832506..... 19
47832508..... 19
47832510..... 19
47850006..... 19
47850008..... 19
47872K ..... 18
47873K ..... 18
47874K ..... 18
47882K ..... 18
47883K ..... 18
47884K ..... 18
47S20176..... 21
47S211..... 17
480117..... 51
480217..... 51
480717..... 53
482114..... 51
482117..... 51
48211709... 122
482117SM... 51
482214..... 51
48221409... 122
482217..... 51
48221707... 121
48221709... 122
482217CC .. 123
482217SM... 51
482217WZ ... 51
482317..... 51
482714..... 53
482717..... 53
482814..... 53
482817..... 53
48281709... 122
482817WZ ... 53
483117..... 51
483217..... 51
483230..... 67
483317..... 51
483817..... 53
484111..... 52
484117..... 52
484118..... 52
484211..... 52
484217..... 52
484218..... 52
484311..... 52
484317..... 52
484318..... 52
484711..... 53
484717..... 53
484718..... 53
484811..... 53
484817..... 53
484818..... 53
485137..... 51
485237..... 51
485237CC .. 123
485237SM.... 51
485337..... 51
486111..... 52
486117..... 52
486118..... 52
486148..... 51
486211..... 52
486217..... 52
486218..... 52
486237..... 51
486248..... 51
486311..... 52
486317..... 52
486318..... 52
486348..... 51
486711..... 53
486717..... 53
486718..... 53
486811..... 53
486817..... 53
486818..... 53
487111..... 52
487117..... 52
487118..... 52
487211..... 52
487217..... 52
487218..... 52
487237..... 51
487248..... 51
487311..... 52
487317..... 52
487318..... 52
487817..... 53
488237..... 51
488238..... 51
488248..... 51
499907..... 121
499921..... 121
500010..... 105
500016..... 105
500308..... 105
500310..... 105
500312..... 105
500313..... 105
500314..... 105
500315..... 105
500316..... 105
500318..... 105
500319..... 105
500320..... 105
500508..... 105
500510..... 105
500512..... 105
500513..... 105
500514..... 105
500515..... 105
500516..... 105
500518..... 105
500519..... 105
500520..... 105
500708..... 105
500710..... 105
500712..... 105
500713..... 105
500714..... 105
500715..... 105
500716..... 105
500718..... 105
500719..... 105
500720..... 105
500808..... 105
500810..... 105
500812..... 105
500813..... 105
500814..... 105
500815..... 105
500816..... 105
500818..... 105
500819..... 105
500820..... 105
501301..... 105
501501..... 105
501701..... 105
501801..... 105
50205024... 105
50205224... 105
50205524... 105
50205824... 105
50212003... 123
50212024... 106
50212224... 106
50212524... 106
50212824... 106
50242024... 106
50242224... 106
50242524... 106
50242824... 106
50272024... 106
50272224... 106
50272524... 106
50272824... 106
50282024... 106
50282224... 106
50282524... 106
503311..... 102
503313..... 102
503314..... 102
503316..... 102
503318..... 102
504301..... 103
504302..... 103
504333..... 103
504334..... 103
504335..... 103
504346..... 103
504347..... 103
50450106... 103
50450206... 103
50453306... 103
50453406... 103
50453506... 103
50454606... 103
50454706... 103
506101..... 106
50610103... 123
50610160... 107
506106..... 106
506130..... 106
50613003... 123
50613060... 107
506132..... 106
506134..... 106
506135..... 106
50613503... 123
506138..... 106
506140..... 106
50614003... 123
50614060... 107
506144..... 106
506150..... 106
50615003... 123
50615060... 107
506157..... 106
50616060... 107
506163..... 106
50616303... 123
506169..... 106
506175..... 106
50617503... 123
50618060... 107
506182..... 106
506188..... 106
506194..... 106
506211..... 106
506220..... 106
506330..... 111
506340..... 111
506363..... 111
506401..... 106
506406..... 106
506411..... 106
506430..... 106
506432..... 106
506435..... 106
506438..... 106
506440..... 106
506444..... 106
506450..... 106
506457..... 106
506463..... 106
506469..... 106
506475..... 106
506482..... 106
506488..... 106
506494..... 106
506701..... 106
506706..... 106
506711..... 106
506720..... 106
506730..... 106
506732..... 106
506735..... 106
506738..... 106
506740..... 106
506744..... 106
506750..... 106
506757..... 106
506763..... 106
506769..... 106
506775..... 106
506782..... 106
506788..... 106
506794..... 106
506801..... 106
506806..... 106
506811..... 106
506820..... 106
506830..... 106
506832..... 106
506835..... 106
506838..... 111
506840..... 106
506844..... 106
506850..... 106
506857..... 106
506860..... 111
506863..... 106
506869..... 106
506875..... 106
506882..... 106
506888..... 106
506894..... 106
507001..... 109
507002..... 109
507003..... 109
507004..... 109
507005..... 109
507006..... 109
507007..... 109
507105..... 107
507190..... 107
507301..... 112
507302..... 112
507303..... 112
507304..... 112
507305..... 112
507307..... 112
507308..... 112
507959..... 112
52212024... 106
52212224... 106
52212524... 106
52212824... 106
526101..... 106
526106..... 106
526111..... 106
526130..... 106
526132..... 106
526135..... 106
526138..... 106
526140..... 106
526144..... 106
526150..... 106
526157..... 106
526163..... 106
526169..... 106
526175..... 106
526182..... 106
526188..... 106
526194..... 106
52930124... 109
529302..... 109
529311..... 109
52931160... 109
529811..... 109
532202..... 109
53220203... 123
532203..... 109
53220303... 123
532205..... 109
532211..... 109
53221460... 107
532218..... 109
53221860... 107
53230360... 107
532703..... 111
532716..... 111
532718..... 111
53300824... 109
53300924... 111
53301024... 109
533405..... 107
533408..... 107
540067..... 97
540068..... 97
540069..... 97
540070..... 97
540071..... 97
540072..... 97
540073..... 97
540074..... 97
540075..... 97
540076..... 97
540077..... 97
540078..... 97
540225..... 107
540321..... 107
540323..... 107
540324..... 107
540325..... 107
540327..... 107
541037..... 97
541039..... 97
541045..... 97
541076..... 97
541077..... 97
541079..... 97
541083..... 97
541084..... 97
541085..... 97
541087..... 97
541089..... 97
541093..... 97
541095..... 97
54120060..... 98
54120080..... 98
54120100..... 98
54120130..... 98
54120160..... 98
54120190..... 98
54120200..... 98
54120220..... 98
54120250..... 98
54120280..... 98
54120300..... 98
54120320..... 98
54120380..... 98
541301..... 118
54130107... 121
54130109... 122
541372..... 107
541373..... 107
542301..... 101
542302..... 101
542303..... 101
542304..... 101
542305..... 101
542306..... 101
542307..... 101
542309..... 101
542311..... 101
542313..... 101
542315..... 101
542319..... 101
542320..... 101
542347..... 101
542351..... 101
542381..... 101
542501..... 101
542502..... 101
542503..... 101
542504..... 101
542506..... 101
542507..... 101
542508..... 101
542511..... 101
542513..... 101
542515..... 101
542519..... 101
542520..... 101
542538..... 101
542541..... 101
542701..... 101
542702..... 101
542703..... 101
542704..... 101
542705..... 101
542706..... 101
542707..... 101
542709..... 101
542711..... 101
542713..... 101
542715..... 101
542719..... 101
542720..... 101
542739..... 101
542740..... 101
542741..... 101
542801..... 101
542802..... 101
542803..... 101
542804..... 101
542807..... 101
542811..... 101
542812..... 101
542813..... 101
542815..... 101
542818..... 101
542819..... 101
542820..... 101
542822..... 101
542823..... 101
542881..... 101
54320060..... 98
54320080..... 98
54320100..... 98
54320130..... 98
54320160..... 98
54320190..... 98
54320220..... 98
54320250..... 98
54320280..... 98
54320300..... 98
54320320..... 98
544301..... 110
544302..... 110
544307..... 111
544361..... 111
544804..... 110
54520012..... 98
54520019..... 98
54520022..... 98
54520026..... 98
54520032..... 98
54520042..... 98
54520055..... 98
54520060..... 98
54520080..... 98
54520100..... 98
54520130..... 98
54520160..... 98
54520190..... 98
54520220..... 98
54520250..... 98
54520280..... 98
54520300..... 98
54520320..... 98
545303..... 111
545307..... 110
545311..... 110
545312..... 110
545320..... 110
545321..... 110
545322..... 110
545331..... 111
545338..... 110
546302..... 112
546304..... 112
546306..... 112
546314..... 112
546318..... 112
546906..... 112
546908..... 112
549101..... 107
549102..... 107
549103..... 107
549104..... 107
549105..... 107
549106..... 107
549107..... 107
549108..... 107
551801..... 110
551811..... 111
551812..... 111
552403..... 110
552404..... 110
552811..... 111
552816..... 111
553711..... 110
554903..... 110
559713..... 111
559802..... 101
559803..... 101
559804..... 101
559805..... 101
559806..... 101
559807..... 101
559810..... 101
560310..... 102
560315..... 102
560320..... 102
560325..... 102
560330..... 102
560510..... 102
560515..... 102
560520..... 102
560525..... 102
560530..... 102
560710..... 102
560715..... 102
560720..... 102
560725..... 102
560730..... 102
561304..... 102
562508..... 114
562510..... 114
562512..... 114
562515..... 114
562518..... 114
562522..... 114
562528..... 114
562535..... 114
563301..... 115
564101..... 110
56422060..... 99
56422080..... 99
564301..... 110
56532100..... 99
56532130..... 99
56532160..... 99
56532190..... 99
56532210..... 99
56532240..... 99
56532250..... 99
56532290..... 99
56532320..... 99
56534100..... 99
56534130..... 99
56534160..... 99
56534190..... 99
56534200..... 99
56534210..... 99
56534250..... 99
56534290..... 99
56534320..... 99
56552100..... 99
56552130..... 99
56552160..... 99
56552190..... 99
56552250..... 99
56554160..... 99
56554190..... 99
56554250..... 99
56554290..... 99
56554320..... 99
566601..... 113
566602..... 113
566603..... 113
566701..... 113
566702..... 113
566703..... 113
567201..... 113
567601..... 113
567603..... 113
567671..... 113
567701..... 113
567703..... 113
567731..... 113
567771..... 113
568802..... 113
568805..... 113
568806..... 113
570907..... 115
570910..... 115
599908..... 114
599921..... 111
599931..... 111
599962..... 111
599991..... 111


In the course of further technical developments, the right is reserved to change the construction and appearance of the brushes without prior notice. Indications of size are approximate and without obligation or recourse to third parties.

**Bold printed item numbers**
are always on stock.
*Italic printed* articles
as well as special brushes will be produced for you with a short delivery time.
Please also see our terms on page 139.

|| ||| ||
EAN

All packaging units are marked with an EAN Code. This symbol shows, which articles are marked with an EAN Code in particular.



# Keyword Index


**Article Page**

Accessoires Wheel Brushes ..... 36 - 37
Adapter Sets ..... 36 - 37
Adapter Threads.....37, 113
Band Saw Brushes..... 34 - 35
Battery Terminal Brushes ..... 115
Bevel Brushes..... 56 - 57
Blister packaging..... 122
Boiler Brushes ..... 108 - 110
Boiler Brushes-Sets..... 111
Bore Hole Cleaning Brushes..... 103
Brake Caliper Bruhes ROKI..... 80
Bricklayer's Brushes..... 87
Brooms ..... 88 - 89
Brushes for grass trimmers..... 58 - 59
Brushes for wood working..... 32 - 33
Brushes removing wet storage stain..... 85
Chimney Brushes..... 108 - 109
**Cup and Bevel Brushes..... 48 - 59**
Cup Brushes, abrasive filament ..... 54
Cup Brushes, brass coated steel wire ..... 54
Cup Brushes, crimped wire ..... 54
Cup Brushes, knotted ..... 50 - 53
Cup Brushes with Shank..... 66 - 67
Cup Brushes, straight filament ..... 55
Cut Cases ..... 123
Cylinder Brushes ..... 100 - 102
**Deburring Brushes..... 38 - 47**
Deburring End Brushes..... 46 - 47
Deburring Wheel Brushes ..... 40 - 43
Disc Brushes..... 129 - 131
Displaybox ..... 121
**DIY Brushes ..... 116 - 125**
DIY Brush Sortiments..... 118 - 121
Drive Arbors ..... 36 - 37
Dusters ..... 90 - 91
End Brushes, knotted..... 72 - 73
End Brushes with Shank ..... 68 - 71
File Cards..... 87
File Cleaners ..... 87
Fine Scratch Brushes..... 83
Fitting Brushes ..... 114
Gas Cooker Brushes ..... 83
**Hand Brushes and Brooms..... 76 - 93**
Hand Brushes Export Model..... 81
Hand Brushes Heavy Duty..... 81
Hand Brushes Rectangular and Violin..... 85
Hand Brushes Standard ..... 69 - 79
Hand Brushes with Plastic Handle..... 80
Hand Brushes with Scraper ..... 81
Hand Brushes with Strap ..... 85
Hand Brushes with Two-Components Handles ..... 80
Handles and Extensions..... 113
Hanger assembly for tube brushes ..... 123
Hole Cleaning Brushes..... 102
**Industrial Brushes..... 126 - 137**
**Interior Brushes..... 93 - 115**
Joint Cleaning Brushes ..... 19
Knotted Wheel Brushes ..... 16 - 18
Lath Brushes ..... 132 - 133
Metal Discs Spare Parts ..... 36 - 37
Mikroabrasive Interior Brushes..... 96 - 98
Mikro Interior Brushes ..... 99
Miniature Brushes ..... 74 - 75
Packaging and Presentation..... 122 - 123
Pipeline Brushes..... 20 - 23
Plasterer's Brushes ..... 87
Radiator Brushes..... 86
Rivet Brushes ..... 81
Roller Brushes ..... 44 - 45
Rust Scratcher ..... 115
Satin Brushes ..... 32 - 33
Scratchers ..... 115
Scrubs..... 88 - 89
**Shank Brushes ..... 60 - 75**
Single Segment Brushes ..... 24 - 27
Sleeve Brushes ..... 107
Small Diameter crimped Wheels..... 35
Soldering Fluid Brushes ..... 115
Soluble Oil Brushes..... 115
Spark Plug Brushes..... 82
Special Hand Brushes ..... 84 - 87
Special Wheel Brushes..... 34 - 35
Spiked Rollers..... 87
Staining Brushes ..... 86
Stove Pipe Brushes ..... 112
Strip Brushes..... 137
Striped Brushes ..... 136-137
Stripping Brushes ..... 34 - 35
Structuring Brushes .....62, 64
Tube Brushes..... 104 - 107
Universal Wire Brushes..... 81
**Wheel Brushes ..... 14 - 37**
Wheel Brushes for the treatment of hard metal ..... 35
Wheel Brushes with Shank ..... 62 - 65
Wheel Brushes with Thread..... 56 - 57
Weed Brooms ..... 92 - 93
Weed Brushes ..... 92 - 93
Wide Face Brushes ..... 134


# General Conditions of Sale and Delivery

**Dear customer, you can find the full version of our general conditions under www.lessmann.com**
**The most important conditions are:**

**1. Scope**
Our general conditions of sale apply exclusively; we do not acknowledge any conditions of the customer which are contrary to or deviate from our general conditions of sale, unless we explicitly consented in writing to their validity. All agreements reached between us and the customer for the purpose of carrying out this contract must be made in writing. This applies also to offers and orders which were agreed with our sales representatives. Our general conditions of sale shall apply only to commercial businesses, not to private consumers.

**2. Offer**
All prices contained in an offer are subject to alterations. The prices are valid as fixed prices for 6 months, only after acknowledgement of the order. We reserve rights of ownership and copyrights on diagrams, drawings, design worksheets and other documents; they must not be made accessible to third parties.

**3. Prices – Terms of Payment**
All prices are in € (EURO), ex works Oettingen, exclusive costs of packaging. Our prices do not include Value-Added Tax. Unless stated otherwise in the acknowledgement of the order we grant 2% cash discount on payments in cash made within 10 days after the date of the invoice, payments shall be made within 30 days from the date of the invoice. In case of a delayed payment, we are entitled to demand interest at a rate of 4% p.a. above the actual basis rate of the EZB.

**6. Reservation of Ownership**
The customer shall obtain ownership of the delivered products only after we have received all payments from the business relationship with the customer. In the event of seizures or other actions by third parties, the customer shall inform us thereof immediately in writing. As far as the third party is not able to reimburse our total costs of legal action in accordance with paragraph 771 of the German Code of Civil Procedure, the customer shall reimburse us the loss. The customer is entitled to sell the products. The customer shall assign all rights and titles arising from the further sale to us regardless of wheth er the products have been processed or not. The customer remains entitled to collect the payments from the sales. We shall not collect any payments except the customer is behind with payments and/or has gone bankrupt and/or has stopped payments. Any processing, marking or other changes of the products by the customer shall be done on our behalf. If we have to take back the products, the customer shall give us the name and address of the customer who wished the products to be processed, marked or changed. We shall, at the request of customer, release our rights and titles up to the amount which exceeds 20% of the value of our payment claim to be protected. The selection of the rights and titles to be released shall be at our discretion.

**7. Place of Jurisdiction – Place of Performance – Law**
Place of jurisdiction shall be the place of our office. We also may take proceedings against the customer at the place of its office. Our office is the place of performance, unless our acknowledgement of the order stated something different. The laws of the Federal Republic of Germany shall apply. The United Nations Convention on Contracts for the International Sale of Goods (CISG) shall not apply.

**8. Miscellaneous**
**Special designs can not be taken back. Our deliveries may deviate from the agreed volume by +/- 15%.**
The minimum order value, as well as extra payments for small volume purchases, are fixed in the actual price list. Quantities deviating from the standard packet will be increased or decreased to the corresponding standard packet, otherwise extra payments per incomplete packet will be charged in accordance with the actual price list.
**Minimum order value:**
For stock articles (**bold printed** articles):
net € 100,00
For special production and *italic printed* articles:
net € 250,00 / article
Extra payment for incomplete packets:
net € 3,00

Express delivery on extra charge available.

We reserve the right to change the construction and design of the brushes in the course of further technical developments. Information to measurements are approximate and not binding. All measurements are in mm.

# More information...

**... found on our homepage!**

Beside the variety of languages (german, english, spanish, czech, turkish and russian) we also provide you with useful information.

For example you can download:

- the complete article-number-catalogue-side-index
- enquiry forms of the different special brushes
- notes regarding the filling materials e. g. tables of the chemical and physical characteristics
- our brochure "Brush-Know-How"
- safety and operating instructions
- ISO 9001 certificate
- general terms and conditions

**Please also ask for our special leaflets:**

- Deburring with Brushes
  Art. No. 99EGBENG
- Interior Brushes / Miniature Brushes
  Art. No. 99INBENG
- Disc Brushes
  Art. No. 99TBDEUENG
- Brush Know How
  Technical Advice
  Art. No. 99BKHENG

THE GERMAN BRUSH COMPANY

LESSMANN®

www.lessmann.com



LESSMANN®

## More than 10.000 solutions ...

As a constantly developing and producing specialist we are able to produce special brush models in both small and large series production runs. This is brought about by our own engineering, tool, and equipment building department in association with our modern machine facilities.

LESSMANN®

THE GERMAN BRUSH COMPANY

**Lessmann GmbH**
Lucas-Schultes-Str. 2
86732 Oettingen
Germany

Tel.: +49 9082 707-0
Fax: +49 9082 707-78

www.lessmann.com
info@lessmann.com

USA:
**Lessmann Inc.**
P.O. Box 890125
Houston, TX 77289

www.lessmann-inc.com

Accredited with DIN EN ISO 9001:2008

QUALITY MADE IN GERMANY